CERTIFICATION

AFAQ

N° QUAL/1997/7034

Le Système Qualité adopté par :
The Quality System developed by :

LIBAN CABLES SAL

pour les activités suivantes :
for the following activities :

CONCEPTION, DEVELOPPEMENT, PRODUCTION ET COMMERCIALISATION DE FILS, CORDES ET CABLES NUS ET ISOLES : ELECTRIQUES (BASSE, MOYENNE ET HAUTE TENSION) ET DE TELECOMMUNICATION (A CONDUCTEUR CUIVRE ET A FIBRE OPTIQUE), LE TOUT A USAGE PUBLIC, DOMESTIQUE, INDUSTRIEL ET SPECIAL.

DESIGN, DEVELOPMENT, PRODUCTION AND MARKETING AND SALES OF WIRES, BARE AND INSULATED ROPES AND CABLES : ELECTRICAL (LOW, MEDIUM AND HIGH VOLTAGE) AND OF TELECOMMUNICATION (COPPER CONDUCTOR AND OPTICAL FIBER), FOR PUBLIC, DOMESTIC, INDUSTRIAL AND SPECIAL USE.

exercées sur le(s) site(s) suivant(s) :
carried out in the following location(s) :

Siège Social : Sanayeh Rue Justinien Immeuble CCI BP 11
5008 BEYROUTH LIBAN
Usine : Nahr Ibrahim LIBAN

a été évalué et jugé conforme aux exigences de la norme :
has been assessed and found to conform to the requirements of the standard :

ISO 9001 (1994)

Le certificat correspondant a été délivré dans les conditions d'application fixées par AFAQ le :
The corresponding certificate has been delivered under AFAQ application rules on :

2000-02-06

(année-mois-jour) *Il est valable jusqu'au / It is valid until* **2003-02-05** (year-month-day)

Le Président du Comité de Certification / The President of the Certification Committee	Le Directeur Général d'AFAQ / The Managing Director of AFAQ	Le Représentant de l'Entreprise / On Behalf of the Firm
A. PIGEONNIER	O. PEYRAT	G. BOULBOL

2 QUALITY

Step by step, from raw material to final product, quality constitutes a major concern to Liban Cables.

Raw material are continuously and repetitively tested from trial orders till the last batch received afterwards.

Products are tested within two simultaneous procedures :

- A built in quality control system carried out by the production itself at any step of work in process.
- A parallel and contradictory procedure is also carried out on the same stages and products by independent inspectors reporting to the quality control service.

End users and/or third part inspection authorities are also constantly commissioning the finished products and assessing the strict conformity to ordered specifications.

In fact, our ISO certification stated in February 1997 and renewed in February 2000 by the International Certification Network (EQNET) is certified by the French Association for Quality Assurance (AFAQ), the well known rigourous and independant Accredited European assessor. This certification, under reference AFAQ Nº QUAL / 1997 / 7034, confirms the soudness and the performance of the Quality System we apply for the Design, the Development, the Manufacturing and the Marketing & Sales of all our products.

3 RECOMMENDED ORDERING PARAMETERS

For prompt quotation / supplies please make sure your inquiries and your orders are securing the following data:

1 - International or Special Standard. (Alternatively, the precise usage of the cable.)

2 - Rated voltage.

3 - Copper or Aluminium conductors.

4 - Size of each conductor.

5 - Insulation material : general purpose PVC, special PVC, XLPE or others.

6 - Insulation colour :

- Usual colour are : grey for the neutral and black, red and blue for the phases.
- Any other colour is available on request.

7 - Number of conductors.

8 - Othre requirements.

9 - Packing.

10 - Required delivery time.

11 - Required validity.

NOTICE

As this catalogue is not intended to cover all of **LIBAN CABLES SAL** possibilities in Low Tension cables manufacturing, the hereafter listing of the types of cables is not restrictive but only indicative of the main and most current types we manufacture.

On the other hand, our specification sheets are inspired mainly from International Electrotechnical Commision Specification (IEC) only in order to conform with the sustained trend, noticed both regionally and worlwide, towards these same IEC supposed to inspire any further standardization approaches.

Whereas, in fact, some Low Tension cables may require special conception, fully within the capabilities of **LIBAN CABLES SAL**, ISO 9001 certified, precisely because in position to conceive / tailor your special needs.

That is why, while consulting this catalogue, it is important to take into account that any combination or change of the constructional details mentioned in this catalogue remain feasible, on base of special conception / development, matching any special or different specifications.

Finally, and within our policy of constant improvement, we reserve the right to alter any part of the information contained in this publication without incurring any obligation.
In all cases this brochure being only indicative, and unless expressly agreed upon, it cannot be considered by any mean as contractual document.

INDUSTRIAL and DISTRIBUTION
LOW TENSION CABLES

CONTENTS

1 INTRODUCTION

Devoted to the manufacturing of electric and telecom cables, Liban Cables is the first and largest supplier in Lebanon and a leader in the Middle-East region.

Liban Cables was founded in 1968 by a group of Lebanese industrialists backed up by the technical assistance of two international leading firms :

- Les Cables de Lyon - France (became ALCATEL afterwards)
- Phelps Dodge - U.S.A

Staffed with qualified engineers and highly skilled technicians, our plant is located in Nahr-Ibrahim at 30 Km from Beirut, where cables are designed and manufactured according to all international specifications : IEC, VDE, UTE, BS, and others on customer request.

Early after its foundation, Liban Cables has become the major supplier of the Lebanese market in both the public and private sectors. The product range of Liban Cables covers all electric cables up to 36 KV, communications cables (copper and optical fiber) in addition to a wide variety of special cables manufactured on customer request.

High quality cables, continuous developments of the production range, direct and fast shipments have contributed in rendering Liban Cables an important exporter for many countries on the three limitrophe continents (Asia, Europe, Africa). Liban Cables products are particularly appreciated by administrations and international contractors operating in the region and seeking reliable and direct supplies of power and communication cables.

2 QUALITY ASSURANCE

Step by step, from raw material to final product, quality constitutes a major concern to Liban Cables.

Raw material are continuously and repetitively tested from trial orders till the last batch received afterwards.

Products are tested within two simultaneous procedures :

- A built in quality control system carried out by the production itself at any step of work in process.

- A parallel and contradictory procedure is also carried out on the same stages and products by independent inspectors reporting to the quality control service.

End users and/or third part inspection authorities are also constantly commissioning the finished products and assessing the strict conformity to ordered specifications.

N.B.: Liban Cables certification to ISO 9001 is planned for January 1997.

3 RECOMMENDED ORDERING PARAMETERS

For prompt quotation / supplies please make sure your inquiries and your orders are securing the following data :

1 - International or Special Standard. (Alternatively, the precise usage of the cable.)

2 - Rated voltage.

3 - Copper or Aluminium conductors.

4 - Size of each conductor.

5 - Insulation material : general purpose PVC, special PVC, XLPE or others.

6 - Number of conductors.

7 - Other requirements.

8 - Packing.

9 - Required delivery time.

10 - Required validity.

4 GENERALITIES

4.1 CONDUCTORS

The commonly used conductors materials are copper and aluminium meeting the requirements of IEC 60228.

Theoretical characteristics of copper and aluminium are as follows :

	Annealed Copper	Annealed Aluminium
Specific Gravity (kg/dm^3)	8.9	2.7
Resistivity at 20˚C (Ohm. mm^2/m)	17.241 x 10^{-3}	28.264 x 10^{-3}
Breaking Load (daN/mm^2)	23 to 25	12 to 15
Elongation at break (%)	20 to 40	1 to 4

Equivalent standardized cross sectional area at equal voltage drop

Copper (mm^2)	Aluminium (mm^2)
6	10
10	16
16	25
25	35
35	50
50	70
70	95
95	150
120	185
150	240
185	300

4.2 PROPERTIES OF INSULATING MATERIALS

MATERIAL	PVC	PE	XLPE
Specific gravity (kg/dm³)	1.3 - 1.5	0.92 - 0.97	0.92 - 1.18
Dielectric constant	5 - 8	2.3	2.5
Breaking load (bars) min.	100 - 200	100	125 - 150
Elongation at break min.	150 %	350 %	200 %
Max. continuous operating temperature (˚C)	70 - 105	70	90
Max. short circuit temperature (˚C)	160	150	250
Moisture proof	Good	Very good	Very good
Flame proof	Very good	Poor	Poor
Flexibility	Good	Poor	Poor
Insulation resistance constant, Ki at 20˚C (Megohm x km)	5000	> 20.000	> 20.000

4.3 DETERMINATION OF THE CROSS SECTIONAL AREA

The determination of the cross sectional area depends on the :

- Current carrying capacities in continuous loading,
- Voltage drop in continuous loading
- Permissible short-circuit current,
- Conditions of installation (temperature, spacing, ...).

4.4 CURRENT CARRYING CAPACITIES

The heat produced by the cable under the set conditions must be able to dissipate to the ambient environment at any point of the cable installation; therefore the loading of the cable must be limited accordingly. The current carrying capacities shown in the electrical characteristics tables are calculated according to the internationally adopted method of the IEC publication 60287 for a maximum core temperature of 70˚C for PVC insulated cables and 90˚C for XLPE insulated cables, at the following installation conditions :

4.4.1. BURIED CABLES

The stated values are for cables or ducts placed in the ground at a depth of 600 mm of average thermal resistivity of 100˚C.cm/w and spaced so that the temperature rise in each duct has no effect on the other ducts (space being greater than 1 meter), for a soil temperature of 20˚C.

DOUBLE STEEL TAPE ARMOURED
PVC INSULATED, PVC SHEATHED
0.6 / 1 KV POWER CABLES
Conforming to IEC 60502-1

DIMENSIONAL CHARACTERISTICS

Nominal cross section*	Radial Thickness of			Nominal Diameters			Approximative net weight				Length on drum
							Copper cable		Aluminium cable		
	Insulation	Inner Sheath	Outer Sheath	Conductor	Insulation	Overall	Conductor	Cable	Conductor	Cable	
mm^2	mm	mm	mm	mm	mm	mm	Kg/Km	Kg/Km	Kg/Km	Kg/Km	m
TWO CORE											
2 x 1.5	0.8	1.0	1.8	1.38	2.98	14	27	259	...	...	1000
2 x 2.5	0.8	1.0	1.8	1.78	3.38	15	44	302	...	...	1000
2 x 4	1.0	1.0	1.8	2.25	4.25	16	70	390	...	...	1000
2 x 6	1.0	1.0	1.8	2.95	4.95	18	107	485	...	...	1000
2 x 10	1.0	1.0	1.8	3.82	5.82	20	179	625	55	500	1000
2 x 16	1.0	1.0	1.8	4.83	6.83	22	284	805	87	610	1000
2 x 25	1.2	1.0	1.8	6.02	8.42	25	450	1120	138	810	500
2 x 35	1.2	1.0	1.8	7.15	9.55	27	624	1410	191	975	500
THREE CORE											
3 x 1.5	0.8	1.0	1.8	1.38	2.98	14	40	285	...	...	1000
3 x 2.5	0.8	1.0	1.8	1.78	3.38	15	66	338	...	...	1000
3 x 4	1.0	1.0	1.8	2.25	4.25	17	105	448	...	...	1000
3 x 6	1.0	1.0	1.8	2.95	4.95	19	160	560	...	...	1000
3 x 10	1.0	1.0	1.8	3.82	5.82	21	269	730	82	545	1000
3 x 16	1.0	1.0	1.8	4.83	6.83	23	426	975	130	680	1000
3 x 25	1.2	1.0	1.8	6.02	8.42	26	675	1390	206	920	500
3 x 35	1.2	1.0	1.8	shaped	shaped	26	945	1530	289	875	500
3 x 50	1.4	1.0	1.9	shaped	shaped	30	1279	1990	391	1100	500
3 x 70	1.4	1.2	2.1	shaped	shaped	33	1848	2720	565	1440	500
3 x 95	1.6	1.2	2.3	shaped	shaped	39	2562	3990	783	2210	500
3 x 120	1.6	1.2	2.4	shaped	shaped	42	3242	4800	990	2550	250
3 x 150	1.8	1.4	2.5	shaped	shaped	48	3978	5900	1216	3140	250
3 x 185	2.0	1.4	2.7	shaped	shaped	51	4990	7150	1525	3690	250
3 x 240	2.2	1.4	2.9	shaped	shaped	57	6557	9100	2004	4550	250
3 x 300	2.4	1.6	3.1	shaped	shaped	63	8226	11200	2514	5500	250

* - Solid conductor for sizes up to and including 4 mm^2.
- Stranded sectoral conductor for sizes of 35 mm^2 and above in three and four core cables.
- Stranded circular conductor for remaining sizes.
- Greater sections also available

DOUBLE STEEL TAPE ARMOURED
PVC INSULATED, PVC SHEATHED
0.6 / 1 KV POWER CABLES
Conforming to IEC 60502-1

DIMENSIONAL CHARACTERISTICS

Nominal cross section*	Radial Thickness of			Nominal Diameters			Approximative net weight				Length on drum
							Copper cable		Aluminium cable		
	Insulation	Inner Sheath	Outer Sheath	Conductor	Insulation	Overall	Conductor	Cable	Conductor	Cable	
mm^2	mm	mm	mm	mm	mm	mm	Kg/Km	Kg/Km	Kg/Km	Kg/Km	m
FOUR CORE											
4 x 1.5	0.8	1.0	1.8	1.38	2.98	15	53	322	...	...	1000
4 x 2.5	0.8	1.0	1.8	1.78	3.38	16	88	388	...	...	1000
4 x 4	1.0	1.0	1.8	2.25	4.25	18	140	520	...	...	1000
4 x 6	1.0	1.0	1.8	2.95	4.95	20	213	660	...	...	1000
4 x 10	1.0	1.0	1.8	3.82	5.82	22	358	875	110	625	1000
4 x 16	1.0	1.0	1.8	4.83	6.83	25	568	1180	174	785	1000
4 x 25	1.2	1.0	1.8	6.02	8.42	28	900	1710	275	1090	500
4 x 35	1.2	1.0	1.9	shaped	shaped	30	1259	1970	385	1100	500
4 x 50	1.4	1.2	2.1	shaped	shaped	34	1705	2620	521	1440	500
4 x 70	1.4	1.2	2.2	shaped	shaped	39	2464	3860	754	2150	500
4 x 95	1.6	1.2	2.4	shaped	shaped	44	3417	5100	1044	2730	500
4 x 120	1.6	1.4	2.5	shaped	shaped	48	4323	6250	1320	3250	250
4 x 150	1.8	1.4	2.7	shaped	shaped	52	5305	7550	1621	3870	250
4 x 185	2.0	1.6	2.9	shaped	shaped	58	6654	9300	2023	4680	250
4 x 240	2.2	1.6	3.1	shaped	shaped	64	8743	11850	2672	5800	250
4 x 300	2.4	1.6	3.3	shaped	shaped	70	10969	14600	3352	7000	250
FOUR CORE WITH REDUCED NEUTRAL											
3 x Ph. +N.	Ph.	N.			Ph.	N.	Ph.	N.			
3 x 25+16	1.2	1.0	1.0	1.8	6.02	4.83	8.42	6.83	28	817	1600	249	1030	500
3 x 35 + 16	1.2	1.0	1.0	1.8	shaped	4.83	shaped	6.83	28	1086	1740	333	925	500
3 x 50 + 25	1.4	1.2	1.0	2.0	shaped	6.02	shaped	8.42	32	1504	2320	460	1280	500
3 x 70 + 35	1.4	1.2	1.2	2.1	shaped	shaped			36	2163	3140	662	1640	500
3 x 95 + 50	1.6	1.4	1.2	2.3	shaped	shaped			42	2989	4570	914	2500	500
3 x 120+70	1.6	1.4	1.4	2.4	shaped	shaped			46	3858	5650	1179	2970	250
3 x 150+70	1.8	1.4	1.4	2.6	shaped	shaped			49	4594	6650	1404	3460	250
3 x 185+95	2.0	1.6	1.4	2.7	shaped	shaped			54	5845	8200	1786	4140	250
3x240+120	2.2	1.6	1.6	2.9	shaped	shaped			60	7638	10450	2334	5150	250
3x300+150	2.4	1.8	1.6	3.1	shaped	shaped			66	9552	12850	2919	6200	250

* - Solid conductor for sizes up to and including 4 mm^2.
- Stranded sectoral conductor for sizes of 35 mm^2 and above in three and four core cables.
- Stranded circular conductor for remaining sizes.
- Greater sections also available

DOUBLE STEEL TAPE ARMOURED
PVC INSULATED, PVC SHEATHED
0.6 / 1 KV POWER CABLES
Conforming to IEC 60502-1

ELECTRICAL CHARACTERISTICS

Nominal cross section	DC Resistance at 20˚C (1)		Voltage Drop (2) Cos φ = 0.8		Current carrying capacity (3)			
					Underground Cable		Cables in air	
	Copper	Alu	Copper	Alu	Copper	Alu	Copper	Alu
mm²	Ω/Km	Ω/Km	V/A x Km	V/A x Km	Amp	Amp	Amp	Amp
1.5	12.1	...	23.3	...	30	...	22	...
2.5	7.41	...	14.2	...	41	...	30	...
4	4.61	...	9.0	...	53	...	40	...
6	3.08	...	6.1	...	67	...	52	...
10	1.83	3.08	3.7	6.1	91	67	71	55
16	1.15	1.91	2.3	3.8	115	90	96	75
25	0.727	1.20	1.5	2.4	146	114	127	99
35	0.524	0.868	1.1	1.7	176	137	157	125
50	0.387	0.641	0.9	1.4	212	165	190	151
70	0.268	0.443	0.6	1.0	261	204	242	192
95	0.193	0.320	0.5	0.7	313	244	293	232
120	0.153	0.253	0.4	0.6	358	279	339	269
150	0.124	0.206	0.4	0.5	400	312	390	309
185	0.0991	0.164	0.3	0.4	451	352	444	353
240	0.0754	0.125	0.3	0.3	522	407	522	415
300	0.0601	0.100	0.2	0.3	590	460	595	472
400	0.0470	0.0778	0.2	0.2	680	530	695	552

(1) At different operating T(˚C) : R = R20˚C {1+ α (T˚C - 20)}
α : Temperature coefficient at 20˚C = 0.00393 for copper & 0.00403 for aluminium

(2) In three phase system decrease above listed voltage drop by 15%

(3) a) Laying conditions : - Underground : Temperature of the soil 20˚C - Thermal resistivity 100˚C cm/w
- In air : Ambient temperature 30˚C

b) In three phase system decrease above listed current ratings by 10%

DOUBLE STEEL TAPE ARMOURED
XLPE INSULATED, PVC SHEATHED
0.6 / 1 KV POWER CABLES
Conforming to IEC 60502-1

DIMENSIONAL CHARACTERISTICS

Nominal cross section*	Radial Thickness of			Nominal Diameters			Approximative net weight				Length on drum
							Copper cable		Aluminium cable		
	Insulation	Inner Sheath	Outer Sheath	Conductor	Insulation	Overall	Conductor	Cable	Conductor	Cable	
mm^2	mm	mm	mm	mm	mm	mm	Kg/Km	Kg/Km	Kg/Km	Kg/Km	m
TWO CORE											
2 x 1.5	0.7	1.0	1.8	1.38	2.78	14	27	251	...	...	1000
2 x 2.5	0.7	1.0	1.8	1.78	3.18	14	44	293	...	...	1000
2 x 4	0.7	1.0	1.8	2.25	3.65	15	70	348	...	...	1000
2 x 6	0.7	1.0	1.8	2.95	4.35	17	107	434	...	...	1000
2 x 10	0.7	1.0	1.8	3.82	5.22	19	179	570	55	446	1000
2 x 16	0.7	1.0	1.8	4.83	6.23	21	284	735	87	540	1000
2 x 25	0.9	1.0	1.8	6.02	7.82	24	450	1040	138	730	500
2 x 35	0.9	1.0	1.8	7.15	8.95	26	624	1340	191	905	500
THREE CORE											
3 x 1.5	0.7	1.0	1.8	1.38	2.78	14	40	274	...	...	1000
3 x 2.5	0.7	1.0	1.8	1.78	3.18	15	66	326	...	...	1000
3 x 4	0.7	1.0	1.8	2.25	3.65	16	105	395	...	...	1000
3 x 6	0.7	1.0	1.8	2.95	4.35	17	160	500	...	...	1000
3 x 10	0.7	1.0	1.8	3.82	5.22	19	269	675	82	490	1000
3 x 16	0.7	1.0	1.8	4.83	6.23	22	426	895	130	600	1000
3 x 25	0.9	1.0	1.8	6.02	7.82	25	675	1280	206	810	500
3 x 35	0.9	1.0	1.8	shaped	shaped	25	945	1430	289	775	500
3 x 50	1.0	1.0	1.9	shaped	shaped	28	1278	1850	391	965	500
3 x 70	1.1	1.0	2.0	shaped	shaped	31	1848	2540	565	1260	500
3 x 95	1.1	1.2	2.1	shaped	shaped	35	2562	3390	783	1610	500
3 x 120	1.2	1.2	2.3	shaped	shaped	40	3242	4560	990	2310	250
3 x 150	1.4	1.4	2.4	shaped	shaped	46	3978	5700	1216	2940	250
3 x 185	1.6	1.4	2.6	shaped	shaped	49	4990	6800	1525	3340	250
3 x 240	1.7	1.6	2.8	shaped	shaped	55	6557	8700	2004	4150	250
3 x 300	1.8	1.6	3.0	shaped	shaped	59	8325	10650	2514	4840	250

* - Solid conductor for sizes up to and including 4 mm^2.
- Stranded sectoral conductor for sizes of 35 mm^2 and above in three and four core cables.
- Stranded circular conductor for remaining sizes.
- Greater sections also available

DOUBLE STEEL TAPE ARMOURED
XLPE INSULATED, PVC SHEATHED
0.6 / 1 KV POWER CABLES
Conforming to IEC 60502-1

DIMENSIONAL CHARACTERISTICS

Nominal cross section*	Radial Thickness of			Nominal Diameters			Approximative net weight				Length on drum
							Copper cable		Aluminium cable		
	Insulation	Inner Sheath	Outer Sheath	Conductor	Insulation	Overall	Conductor	Cable	Conductor	Cable	
mm^2	mm	mm	mm	mm	mm	mm	Kg/Km	Kg/Km	Kg/Km	Kg/Km	m
FOUR CORE											
4 x 1.5	0.7	1.0	1.8	1.38	2.78	15	53	307	...	...	1000
4 x 2.5	0.7	1.0	1.8	1.78	3.18	16	88	371	...	...	1000
4 x 4	0.7	1.0	1.8	2.25	3.65	17	140	457	...	...	1000
4 x 6	0.7	1.0	1.8	2.95	4.35	19	213	585	...	...	1000
4 x 10	0.7	1.0	1.8	3.82	5.22	21	358	790	110	540	1000
4 x 16	0.7	1.0	1.8	4.83	6.23	23	568	1090	174	695	1000
4 x 25	0.9	1.0	1.8	6.02	7.82	27	900	1580	275	955	500
4 x 35	0.9	1.0	1.8	shaped	shaped	27	1259	1830	385	955	500
4 x 50	1.0	1.0	1.9	shaped	shaped	31	1705	2380	521	1200	500
4 x 70	1.1	1.2	2.1	shaped	shaped	36	2464	3330	754	1620	500
4 x 95	1.1	1.2	2.3	shaped	shaped	41	3417	4790	1044	2420	500
4 x 120	1.2	1.2	2.4	shaped	shaped	45	4323	5900	1320	2900	250
4 x 150	1.4	1.4	2.6	shaped	shaped	50	5305	7150	1621	3470	250
4 x 185	1.6	1.4	2.8	shaped	shaped	55	6654	8850	2033	4230	250
4 x 240	1.7	1.6	3.0	shaped	shaped	61	8743	11300	2672	5250	250
4 x 300	1.8	1.6	3.2	shaped	shaped	67	10969	13900	3352	6300	250
FOUR CORE WITH REDUCED NEUTRAL											
3 x Ph. +N.	Ph.	N.			Ph.	N.	Ph.	N.			
3 x 25+16	0.9	0.7	1.0	1.8	6.02	4.83	7.82	6.23	26	817	1470	249	900	500
3 x 35 + 16	0.9	0.7	1.0	1.8	shaped	4.83	shaped	6.23	27	1086	1630	333	875	500
3 x 50 + 25	1.0	0.9	1.0	1.9	shaped	6.02	shaped	7.82	29	1504	2140	460	1100	500
3 x 70 + 35	1.1	0.9	1.2	2.1	shaped	shaped	34	2163	2970	662	1470	500
3 x 95 + 50	1.1	1.0	1.2	2.2	shaped	shaped	39	2989	4260	914	2190	500
3 x 120+70	1.2	1.1	1.2	2.4	shaped	shaped	43	3858	5350	1179	2670	250
3 x 150+70	1.4	1.1	1.4	2.5	shaped	shaped	47	4594	6300	1404	3110	250
3 x 185+95	1.6	1.1	1.4	2.7	shaped	shaped	52	5845	7850	1786	3790	250
3x240+120	1.7	1.2	1.6	2.9	shaped	shaped	58	7638	10000	2334	4700	250
3x300+150	1.8	1.4	1.6	3.0	shaped	shaped	63	9552	12000	2919	5550	250

* - Solid conductor for sizes up to and including 4 mm^2.
- Stranded sectoral conductor for sizes of 35 mm^2 and above in three and four core cables.
- Stranded circular conductor for remaining sizes.
- Greater sections also available

DOUBLE STEEL TAPE ARMOURED
XLPE INSULATED, PVC SHEATHED
0.6 / 1 KV POWER CABLES
Conforming to IEC 60502-1

ELECTRICAL CHARACTERISTICS

Nominal cross section	DC Resistance at 20˚C(1)		Voltage Drop (2) Cos φ = 0.8		Current carrying capacity (3)			
					Underground Cable		Cables in air	
	Copper	Alu	Copper	Alu	Copper	Alu	Copper	Alu
mm²	Ω/Km	Ω/Km	V/A x Km	V/A x Km	Amp	Amp	Amp	Amp
1.5	12.1	...	24.8	...	34	...	27	...
2.5	7.41	...	14.8	...	46	...	37	...
4	4.61	...	9.2	...	59	...	50	...
6	3.08	...	6.2	...	74	...	64	...
10	1.83	3.08	3.7	6.1	101	79	88	69
16	1.15	1.91	2.4	3.9	128	100	119	93
25	0.727	1.20	1.6	2.5	162	126	157	122
35	0.524	0.868	1.2	1.9	195	152	194	151
50	0.387	0.641	0.87	1.4	235	183	235	183
70	0.268	0.443	0.64	1.0	290	226	299	234
95	0.193	0.320	0.48	0.75	347	271	362	282
120	0.153	0.253	0.40	0.60	397	310	419	327
150	0.124	0.206	0.35	0.50	444	346	481	375
185	0.0991	0.164	0.29	0.42	500	390	549	428
240	0.0754	0.125	0.24	0.33	578	452	645	503
300	0.0601	0.100	0.23	0.30	655	512	735	575
400	0.0470	0.0778	0.22	0.28	754	588	859	670

(1) At different operating T(˚C) : R = R20˚C {1+ α (T˚C - 20)}
α : Temperature coefficient at 20˚C = 0.00393 for copper & 0.00403 for aluminium

(2) In three phase system decrease above listed voltage drop by 15%

(3) a) Laying conditions : - Underground : Temperature of the soil 20˚C - Thermal resistivity 100˚C cm/w
- In air : Ambient temperature 30˚C

b) In three phase system decrease above listed current ratings by 10%

5.3 CONCENTRIC CONDUCTOR, PVC INSULATED AND SHEATHED 0.6 / 1 KV POWER CABLES

1. SCOPE

This specification covers circular, single, twin, three or four PVC insulated conductors with a concentric conductor over the assembly of cores, rated 0.6/1KV, type NYCY to VDE 0271; for use in aerial, direct burial, conduit, open tray and undergroud duct installations, These cables offer high resistance to ageing, abrasion, moisture, chemicals, oils and acids and afford protection of phase coductors against external ingress.

2. CONSTRUCTION

2.1 Conductor

Plain, annealed electrolytic copper conductors, solid, circular stranded, or sectoral stranded conforming to the applicable requirements of IEC 60228.

2.2 Insulation

PVC based thermoplastic material conforming to the applicable requirements of VDE 0209.

2.3 Assembly

Insulated conductors are laid up, filled where necessary with non-hygroscopic material and covered with an additional layer of extruded thermoplastic material or a PVC binding tape.

2.4 Concentric Conductor

Bare, plain, annealed electrolytic copper wires are layed over the common covering of cores with a counter helix of copper tape on top.

2.5 Sheath

PVC based thermoplastic material, conforming to the applicable requirements of VDE 0209.

2.6 TESTS

Conforming to the applicable requirements of relative specifications.

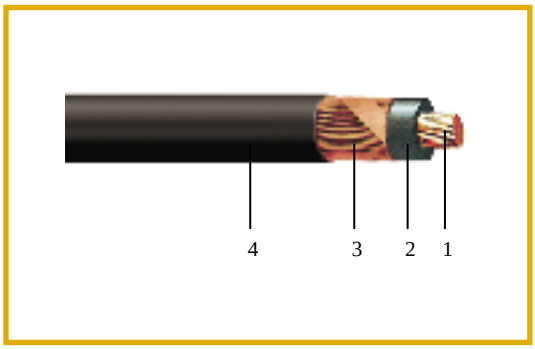

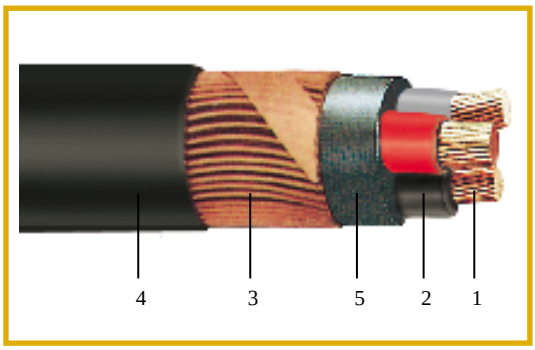

1	Stranded circular copper conductor
2	PVC insulation
3	Concentric copper wires
4	PVC sheath
5	Bedding

Where the thermal resistivity is different (not 100˚ C.cm/w) the current rating should be multiplied by the correction factors shown in the following table.

Correction factor for different soil thermal resistivity

Nature of the soil	Soil thermal resistivity ˚C.cm/w	Correction factor
Very wet soil	40 50 70	1.25 1.21 1.13
Normal soil	85 100	1.05 1.00
Dry soil	120 150	0.94 0.86
Very dry soil	200 250 300	0.76 0.70 0.65

Where the temperature of the soil is different (not 20˚C) the current rating should be multiplied by the following correction factors.

Correction factor for different soil temperatures

Soil temperature (˚C)	Carrying core temperature (˚C)								
	65	70	75	80	85	90	95	100	105
0	1.20	1.18	1.17	1.15	1.14	1.13	1.13	1.12	1.11
5	1.15	1.14	1.13	1.12	1.11	1.10	1.10	1.09	1.08
10	1.11	1.10	1.09	1.08	1.07	1.07	1.06	1.06	1.06
15	1.05	1.05	1.04	1.04	1.04	1.04	1.03	1.03	1.03
20	1	1	1	1	1	1	1	1	1
25	0.94	0.95	0.95	0.96	0.96	0.96	0.97	0.97	0.97
30	0.88	0.89	0.90	0.91	0.92	0.93	0.93	0.94	0.94
35	0.82	0.84	0.85	0.87	0.88	0.89	0.89	0.90	0.91
40	0.75	0.77	0.80	0.82	0.83	0.85	0.86	0.87	0.87
45	0.67	0.71	0.74	0.76	0.78	0.80	0.82	0.83	0.84
50	0.58	0.63	0.67	0.71	0.73	0.76	0.77	0.79	0.80

When several cables or ducts are laid underground with less than one meter spacing the current rating values should be multiplied by the following correction factors :

Correction factor of proximity effect for underground cables

Single or multicore cables					
Number of circuits	**Touching cables**	**One diameter spaced cables a = D**	**a = 0.25m**	**a = 0.5m**	**a = 1.0m**
2	0.76	0.79	0.84	0.88	0.92
3	0.64	0.67	0.74	0.79	0.85
4	0.57	0.61	0.69	0.75	0.82
5	0.52	0.56	0.65	0.71	0.80
6	0.49	0.53	0.60	0.69	0.78

D = overall outer sheath diameter a = Space between cables

4.4. 2. CABLES LAID " IN AIR " :

The stated values are for cables or ducts laid " in air " with an ambient temperature of 30˚C and out of direct sunlight, spaced so that the temperature rise of individual cables has no influence on others. The spacing between adjacent cables is at least twice the cable or duct diameter.

When the ambient temperature is different (not 30˚C) the current rating values should be multiplied by the following correction factors :

Correction factor for different ambient temperatures

Ambient temperature (˚C)	Carrying core temperature (˚C)								
	65	**70**	**75**	**80**	**85**	**90**	**95**	**100**	**105**
0	1.36	1.32	1.29	1.26	1.24	1.22	1.21	1.20	1.18
5	1.31	1.27	1.25	1.22	1.21	1.19	1.18	1.16	1.15
10	1.25	1.22	1.20	1.18	1.17	1.15	1.14	1.13	1.13
15	1.20	1.17	1.15	1.14	1.13	1.12	1.11	1.10	1.10
20	1.13	1.12	1.11	1.10	1.09	1.08	1.07	1.07	1.06
25	1.07	1.06	1.05	1.05	1.04	1.04	1.04	1.04	1.03
30	1	1	1	1	1	1	1	1	1
35	0.93	0.94	0.94	0.95	0.95	0.96	0.96	0.96	0.97
40	0.85	0.87	0.88	0.89	0.90	0.91	0.92	0.93	0.93
45	0.76	0.79	0.82	0.84	0.85	0.87	0.88	0.89	0.89
50	0.65	0.71	0.75	0.77	0.80	0.82	0.83	0.85	0.86
55	0.53	0.61	0.67	0.71	0.74	0.76	0.78	0.80	0.82
60	0.38	0.50	0.58	0.63	0.67	0.71	0.73	0.76	0.77
65		0.35	0.47	0.55	0.60	0.65	0.68	0.71	0.73
70			0.33	0.45	0.52	0.58	0.62	0.65	0.68
75				0.32	0.43	0.50	0.55	0.60	0.63
80					0.30	0.41	0.48	0.53	0.58
85						0.29	0.39	0.46	0.52
90							0.28	0.38	0.45
95								0.27	0.37
100									0.26

When several cables are grouped, the current ratings values should be corrected as follows :

Correction of proximity effect for Cables in air

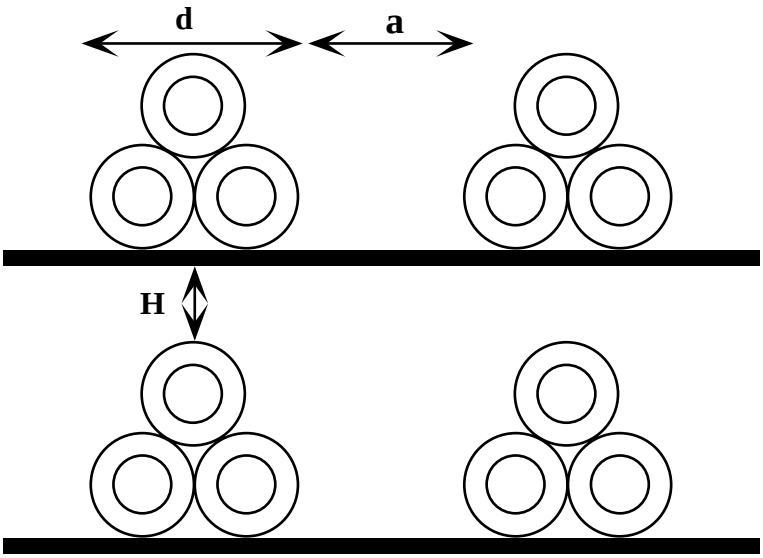

Distance a & H	Number of layers	Number of cables					
		1	2	3	4	5	6
≥ 2d	No proximity effect						
1/4d to 2d	1	1.00	0.94	0.91	0.88	0.87	0.86
	2	0.92	0.87	0.84	0.81	0.80	0.79
	3	0.85	0.81	0.78	0.76	0.75	0.74
	4	0.82	0.78	0.74	0.73	0.72	0.72
	5	0.80	0.76	0.72	0.71	0.70	0.70
	6	0.79	0.75	0.71	0.70	0.69	0.68
≤ 1/4d	1	1.00	0.80	0.70	0.65	0.60	0.57

4.5 VOLTAGE DROP

In addition to the current rating, the determination of the cross sectional area should ensure that the selected cable size is capable to carry the required current between sending and receiving ends of line with a maximum of 3 % in voltage drop for lighting purpose circuits and 5 % for others.

The voltage drop values shown in the electrical characteristics tables are in V/A x Km calculated for a maximum core temperature of 70˚C for PVC cables and 90˚C for XLPE cables.

The voltage drop between sending and receiving ends of line is :

$$DU = U_1 - U_2 \text{ in Volts}$$

$$DU = \frac{U_1 - U_2}{U_1} \times 100 \text{ in } \%$$

In D.C. : $DU = 2 \int RI$

In Single phase : $DU = 2 \int I (R \cos \varphi + LW \sin \varphi)$

In three phase : $DU = \int I\sqrt{3} (R \cos \varphi + LW \sin \varphi)$

Where

DU	=	Voltage drop in volt
l	=	Cable length in km
I	=	Current rating in Amper
R	=	Conductor resistance at the maximum operating temperature in Ohm/km
L	=	Inductance in H/km
W	=	Pulsation = 2 πF = 314 for F = 50 Hz
cos φ	=	Power factor

4.6 CONDUCTORS SHORT - CIRCUIT CURRENT

Current densities given in the table below are in (A / mm²), for different insulation materials and different overload time.

material	**Temperature of conductors**		**Current density (A / mm²)**									
			Conductor metal									
			Copper					**Aluminium**				
	Initial ˚C	**Final ˚C**	**overload in secs**									
			0.1	0.2	0.5	1	2	0.1	0.2	0.5	1	2
PE	20	150	446	315	199	141	99	294	208	131	93	66
	30		424	300	189	134	95	278	197	125	88	63
	70		375	237	150	106	75	221	156	99	70	49
PVC	20	160	458	324	205	145	102	304	215	135	96	68
	30		436	309	195	138	98	284	210	127	90	64
	70		351	248	158	111	79	231	163	104	73	52
XLPE	20	250	557	394	249	176	124	367	260	164	116	82
	30		538	380	241	170	120	354	254	159	112	79
	90		439	311	196	139	98	288	203	129	91	65

For an overload duration (t) different than those figured in the above table, the correspondant current density is given by the following formula :

$$\text{Current density for a duration (t)} = \frac{\text{Current density for 1 sec}}{\sqrt{t}}$$

4.7 MINIMUM BENDING RADIUS

Listed values represent the permanent bending radius the cables withstand in fixed installation and on dispatching reels. Other constraints may impose greater bending radius.

	Cable on drum	**Cable during installation**	**Installed Cable**
Unarmoured single core cables	9 D	18 D	9 D
Unarmoured multi core cables	6 D	12 D	6 D
Armoured cables - steel tapes	8 D	16 D	8 D
- steel wires	10 D	20 D	10 D
	D = Overall diameter in mm		

5 INDUSTRIAL AND DISTRIBUTION 0.6 / 1KV POWER CABLES

5.1 UNARMOURED, PVC OR XLPE INSULATED AND PVC SHEATHED CABLES

1. SCOPE

This specification covers single, two, three or four core cables, PVC or XLPE insulated and PVC sheathed, rated at 0.6/1 KV, unarmoured type to International Electrotechnical Commission Publication IEC 60502-1 for use in cable ducts and indoors and for underground burial, where they are not likely to suffer mechanical damage.

The cables have excellent thermal properties, high dielectric strength and high resistance to ageing, abrasion, moisture, chemicals, acids and oils.

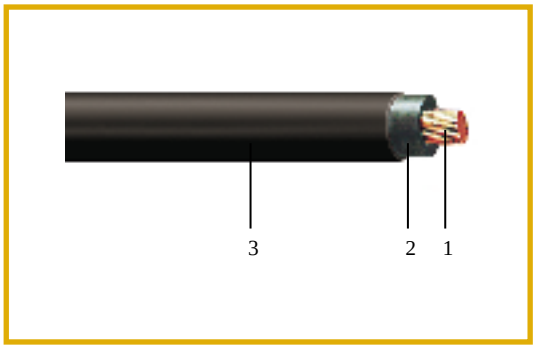

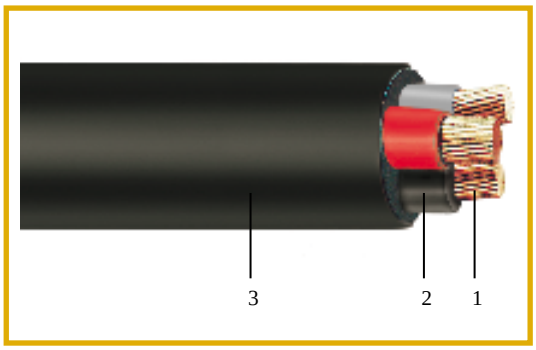

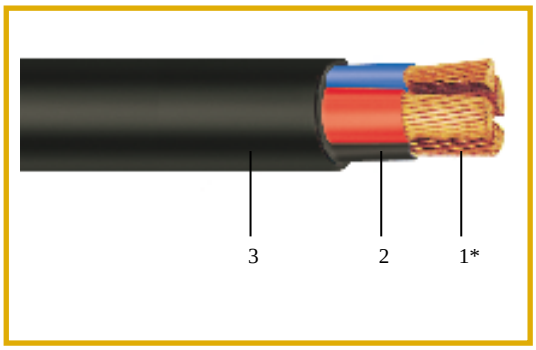

2. CONSTRUCTION

2.1 Conductor

Plain, annealed electrolytic copper or aluminium conductors, solid, circular stranded, or sectoral stranded; conforming to the applicable requirements of IEC 228.

2.2 Insulation

PVC based thermoplastic or XLPE thermosetting material, conforming to the applicable requirements of IEC 60502-1.

2.3 Assembly

Insulated conductors are laid up, filled where necessary with non-hygroscopic material and covered with an additional layer of extruded thermoplastic material or non-hygroscopic binding tape.

2.4 Sheath

PVC based thermoplastic material, conforming to the applicable requirements of IEC 60502-1.

2.5 TESTS

Conforming to the applicable requirements of IEC 60502-1 either on raw materials or on finished products.

1	Stranded circular copper or aluminium conductor *stranded sectoral copper or aluminium conductor
2	PVC or XLPE insulation
3	PVC Sheath

UNARMOURED, PVC INSULATED, PVC SHEATHED
0.6 / 1 KV POWER CABLES
Conforming to IEC 60502-1

DIMENSIONAL CHARACTERISTICS

Nominal cross section*	Radial Thickness of		Nominal Diameters			Approximative net weight				Length on drum
						Copper cable		Aluminium cable		
	Insulation	Outer Sheath	Conductor	Insulation	Overall	Conductor	Cable	Conductor	Cable	
mm^2	mm	mm	mm	mm	mm	Kg/Km	Kg/Km	Kg/Km	Kg/Km	m
SINGLE CORE										
1 x 1.5	0.8	1.4	1.38	2.98	5.9	13	49	...	...	1000
1 x 2.5	0.8	1.4	1.78	3.38	6.3	22	62	...	...	1000
1 x 4	1.0	1.4	2.25	4.25	7.2	35	86	...	...	1000
1 x 6	1.0	1.4	2.95	4.95	7.9	53	113	...	...	1000
1 x 10	1.0	1.4	3.82	5.82	8.7	89	160	28	99	1000
1 x 16	1.0	1.4	4.83	6.83	9.8	141	225	43	127	1000
1 x 25	1.2	1.4	6.02	8.42	12	223	332	68	177	500
1 x 35	1.2	1.4	7.15	9.55	13	309	434	95	220	500
1 x 50	1.4	1.4	8.30	11.10	14	418	565	128	275	500
1 x 70	1.4	1.4	10.00	12.80	16	604	775	185	356	500
1 x 95	1.6	1.5	11.80	15.00	19	838	1060	256	478	500
1 x 120	1.6	1.5	13.30	16.50	20	1059	1300	324	565	500
1 x 150	1.8	1.6	14.80	18.40	22	1299	1590	398	690	500
1 x 185	2.0	1.7	16.55	20.55	25	1630	1990	499	860	500
1 x 240	2.2	1.8	19.40	23.80	28	2143	2590	655	1100	500
1 x 300	2.4	1.9	21.30	26.10	31	2688	3210	822	1340	500
1 x 400	2.6	2.0	24.10	29.30	34	3439	4070	1051	1680	500
1 x 500	2.8	2.1	27.3	32.90	38	4335	5100	1325	2090	500
1 x 630	2.8	2.2	31.0	36.60	42	5597	6450	1710	2560	500
1 x 800	2.8	2.3	37.1	42.70	48	7203	8250	2188	3240	250
TWO CORE										
2 x 1.5	0.8	1.8	1.38	2.98	11	27	131	...	...	1000
2 x 2.5	0.8	1.8	1.78	3.38	11	44	164	...	...	1000
2 x 4	1.0	1.8	2.25	4.25	13	70	233	...	...	1000
2 x 6	1.0	1.8	2.95	4.95	15	107	306	...	...	1000
2 x 10	1.0	1.8	3.82	5.82	16	179	425	55	301	1000
2 x 16	1.0	1.8	4.83	6.83	19	284	590	87	393	1000
2 x 25	1.2	1.8	6.02	8.42	22	450	870	138	560	500
2 x 35	1.2	1.8	7.15	9.55	24	624	1130	191	695	500

* - Solid conductor for sizes up to and including 4 mm^2.
- Stranded sectoral conductor for sizes of 35 mm^2 and above in three and four core cables.
- Stranded circular conductor for remaining sizes.
- Grater sections also available

UNARMOURED, PVC INSULATED, PVC SHEATHED
0.6 / 1 KV POWER CABLES
Conforming to IEC 60502-1

DIMENSIONAL CHARACTERISTICS

Nominal cross section*	Radial Thickness of		Nominal Diameters			Approximative net weight				Length on drum
						Copper cable		Aluminium cable		
	Insulation	Outer Sheath	Conductor	Insulation	Overall	Conductor	Cable	Conductor	Cable	
mm^2	mm	mm	mm	mm	mm	Kg/Km	Kg/Km	Kg/Km	Kg/Km	m
THREE CORE										
3 x 1.5	0.8	1.8	1.38	2.98	11	40	152	...	...	1000
3 x 2.5	0.8	1.8	1.78	3.38	12	66	194	...	...	1000
3 x 4	1.0	1.8	2.25	4.25	14	105	279	...	...	1000
3 x 6	1.0	1.8	2.95	4.95	15	160	373	...	...	1000
3 x 10	1.0	1.8	3.82	5.82	17	269	530	82	343	1000
3 x 16	1.0	1.8	4.83	6.83	20	426	750	130	454	1000
3 x 25	1.2	1.8	6.02	8.42	23	675	1120	206	650	500
3 x 35	1.2	1.8	shaped	shaped	24	945	1310	289	655	500
3 x 50	1.4	1.8	shaped	shaped	27	1279	1730	391	840	500
3 x 70	1.4	1.9	shaped	shaped	30	1848	2390	565	1110	500
3 x 95	1.6	2.1	shaped	shaped	35	2562	3280	783	1500	500
3 x 120	1.6	2.2	shaped	shaped	38	3242	4060	990	1810	250
3 x 150	1.8	2.3	shaped	shaped	44	3978	5000	1216	2240	250
3 x 185	2.0	2.5	shaped	shaped	46	4990	6200	1525	2740	250
3 x 240	2.2	2.7	shaped	shaped	52	6557	8050	2004	3500	250
3 x 300	2.4	2.9	shaped	shaped	59	8226	10050	2514	4340	250
FOUR CORE										
4 x 1.5	0.8	1.8	1.38	2.98	12	53	180	...	...	1000
4 x 2.5	0.8	1.8	1.78	3.38	13	88	232	...	...	1000
4 x 4	1.0	1.8	2.25	4.25	15	140	337	...	...	1000
4 x 6	1.0	1.8	2.95	4.95	17	213	456	...	...	1000
4 x 10	1.0	1.8	3.82	5.82	19	358	655	110	310	1000
4 x 16	1.0	1.8	4.83	6.83	21	568	940	174	545	1000
4 x 25	1.2	1.8	6.02	8.42	25	900	1410	275	785	500
4 x 35	1.2	1.8	shaped	shaped	27	1259	1730	385	855	500
4 x 50	1.4	1.9	shaped	shaped	30	1705	2320	521	1140	500
4 x 70	1.4	2.1	shaped	shaped	34	2464	3220	754	1510	500
4 x 95	1.6	2.2	shaped	shaped	39	3417	4400	1044	2030	500
4 x 120	1.6	2.3	shaped	shaped	43	4323	5450	1320	2450	250
4 x 150	1.8	2.5	shaped	shaped	47	5305	6650	1621	2970	250
4 x 185	2.0	2.7	shaped	shaped	53	6654	8350	2033	3730	250
4 x 240	2.2	2.9	shaped	shaped	59	8743	10800	2672	4730	250
4 x 300	2.4	3.2	shaped	shaped	66	10969	13500	3352	5900	250

UNARMOURED, PVC INSULATED, PVC SHEATHED
0.6 / 1 KV POWER CABLES
Conforming to IEC 60502-1

Nominal cross section*	Radial Thickness of		Nominal Diameters			Approximative net weight				Length on drum
						Copper cable		Aluminium cable		
	Insulation	Outer Sheath	Conductor	Insulation	Overall	Conductor	Cable	Conductor	Cable	
mm^2	mm	mm	mm	mm	mm	Kg/Km	Kg/Km	Kg/Km	Kg/Km	m
FOUR CORE WITH REDUCED NEUTRAL										
3 x Ph. +N.	Ph.	N.		Ph. N.	Ph. N.					
3 x 25+16	1.2	1.0	1.8	6.02 4.83	8.42 6.83	24	817	1320	249	750	500
3 x 35 + 16	1.2	1.0	1.8	shaped 4.83	shaped 6.83	26	1086	1530	333	775	500
3 x 50 + 25	1.4	1.2	1.9	shaped 6.02	shaped 8.42	29	1504	2080	460	1040	500
3 x 70 + 35	1.4	1.2	2.0	shaped	shaped	32	2163	2850	662	1350	500
3 x 95 + 50	1.6	1.4	2.2	shaped	shaped	38	2989	3890	914	1820	500
3 x 120+70	1.6	1.4	2.3	shaped	shaped	41	3858	4890	1179	2210	250
3 x 150+70	1.8	1.4	2.4	shaped	shaped	44	4595	5800	1404	2610	250
3 x 185+95	2.0	1.6	2.6	shaped	shaped	50	5845	7350	1786	3290	250
3x240+120	2.2	1.6	2.8	shaped	shaped	56	7638	9500	2334	4200	250
3x300+150	2.4	1.8	3.0	shaped	shaped	62	9552	11800	2919	5150	250

* - Solid conductor for sizes up to and including 4 mm^2.
- Stranded sectoral conductor for sizes of 35 mm^2 and above in three and four core cables.
- Stranded circular conductor for remaining sizes.
- Grater sections also available

Where the thermal resistivity is different (not 100˚ C.cm/w) the current rating should be multiplied by the correction factors shown in the following table.

Correction factor for different soil thermal resistivity

Nature of the soil	Soil thermal resistivity ˚C.cm/w	Correction factor
Very wet soil	40 50 70	1.25 1.21 1.13
Normal soil	85 100	1.05 1.00
Dry soil	120 150	0.94 0.86
Very dry soil	200 250 300	0.76 0.70 0.65

Where the temperature of the soil is different (not 20˚C) the current rating should be multiplied by the following correction factors.

Correction factor for different soil temperatures

Soil temperature (˚C)	Carrying core temperature (˚C)								
	65	70	75	80	85	90	95	100	105
0	1.20	1.18	1.17	1.15	1.14	1.13	1.13	1.12	1.11
5	1.15	1.14	1.13	1.12	1.11	1.10	1.10	1.09	1.08
10	1.11	1.10	1.09	1.08	1.07	1.07	1.06	1.06	1.06
15	1.05	1.05	1.04	1.04	1.04	1.04	1.03	1.03	1.03
20	1	1	1	1	1	1	1	1	1
25	0.94	0.95	0.95	0.96	0.96	0.96	0.97	0.97	0.97
30	0.88	0.89	0.90	0.91	0.92	0.93	0.93	0.94	0.94
35	0.82	0.84	0.85	0.87	0.88	0.89	0.89	0.90	0.91
40	0.75	0.77	0.80	0.82	0.83	0.85	0.86	0.87	0.87
45	0.67	0.71	0.74	0.76	0.78	0.80	0.82	0.83	0.84
50	0.58	0.63	0.67	0.71	0.73	0.76	0.77	0.79	0.80

When several cables or ducts are laid underground with less than one meter spacing the current rating values should be multiplied by the following correction factors :

Correction factor of proximity effect for underground cables

Single or multicore cables					
Number of circuits	**Touching cables**	**One diameter spaced cables a = D**	**a = 0.25m**	**a = 0.5m**	**a = 1.0m**
2	0.76	0.79	0.84	0.88	0.92
3	0.64	0.67	0.74	0.79	0.85
4	0.57	0.61	0.69	0.75	0.82
5	0.52	0.56	0.65	0.71	0.80
6	0.49	0.53	0.60	0.69	0.78

D = overall outer sheath diameter a = Space between cables

4.4. 2. CABLES LAID " IN AIR " :

The stated values are for cables or ducts laid " in air " with an ambient temperature of 30˚C and out of direct sunlight, spaced so that the temperature rise of individual cables has no influence on others. The spacing between adjacent cables is at least twice the cable or duct diameter.

When the ambient temperature is different (not 30˚C) the current rating values should be multiplied by the following correction factors :

Correction factor for different ambient temperatures

Ambient temperature (˚C)	Carrying core temperature (˚C)								
	65	**70**	**75**	**80**	**85**	**90**	**95**	**100**	**105**
0	1.36	1.32	1.29	1.26	1.24	1.22	1.21	1.20	1.18
5	1.31	1.27	1.25	1.22	1.21	1.19	1.18	1.16	1.15
10	1.25	1.22	1.20	1.18	1.17	1.15	1.14	1.13	1.13
15	1.20	1.17	1.15	1.14	1.13	1.12	1.11	1.10	1.10
20	1.13	1.12	1.11	1.10	1.09	1.08	1.07	1.07	1.06
25	1.07	1.06	1.05	1.05	1.04	1.04	1.04	1.04	1.03
30	1	1	1	1	1	1	1	1	1
35	0.93	0.94	0.94	0.95	0.95	0.96	0.96	0.96	0.97
40	0.85	0.87	0.88	0.89	0.90	0.91	0.92	0.93	0.93
45	0.76	0.79	0.82	0.84	0.85	0.87	0.88	0.89	0.89
50	0.65	0.71	0.75	0.77	0.80	0.82	0.83	0.85	0.86
55	0.53	0.61	0.67	0.71	0.74	0.76	0.78	0.80	0.82
60	0.38	0.50	0.58	0.63	0.67	0.71	0.73	0.76	0.77
65		0.35	0.47	0.55	0.60	0.65	0.68	0.71	0.73
70			0.33	0.45	0.52	0.58	0.62	0.65	0.68
75				0.32	0.43	0.50	0.55	0.60	0.63
80					0.30	0.41	0.48	0.53	0.58
85						0.29	0.39	0.46	0.52
90							0.28	0.38	0.45
95								0.27	0.37
100									0.26

When several cables are grouped, the current ratings values should be corrected as follows :

Correction of proximity effect for Cables in air

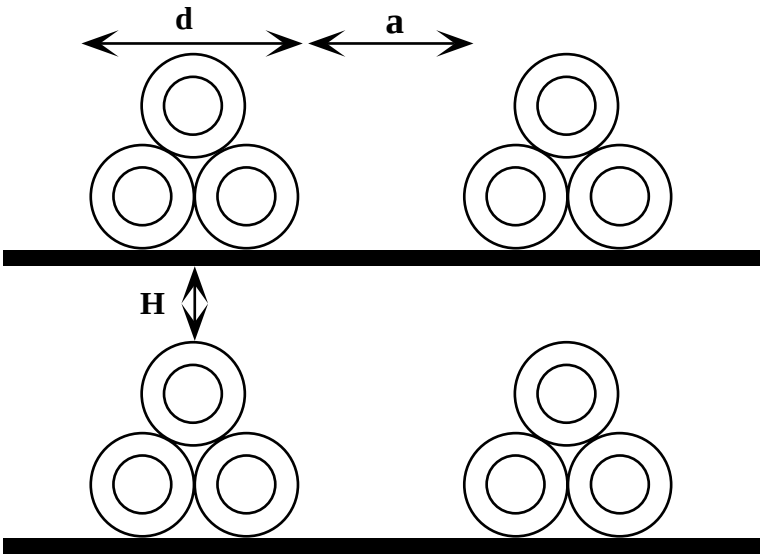

Distance a & H	Number of layers	Number of cables					
		1	2	3	4	5	6
≥ 2d	No proximity effect						
1/4d to 2d	1	1.00	0.94	0.91	0.88	0.87	0.86
	2	0.92	0.87	0.84	0.81	0.80	0.79
	3	0.85	0.81	0.78	0.76	0.75	0.74
	4	0.82	0.78	0.74	0.73	0.72	0.72
	5	0.80	0.76	0.72	0.71	0.70	0.70
	6	0.79	0.75	0.71	0.70	0.69	0.68
≤ 1/4d	1	1.00	0.80	0.70	0.65	0.60	0.57

4.5 VOLTAGE DROP

In addition to the current rating, the determination of the cross sectional area should ensure that the selected cable size is capable to carry the required current between sending and receiving ends of line with a maximum of 3 % in voltage drop for lighting purpose circuits and 5 % for others.

The voltage drop values shown in the electrical characteristics tables are in V/A x Km calculated for a maximum core temperature of 70˚C for PVC cables and 90˚C for XLPE cables.

The voltage drop between sending and receiving ends of line is :

$$DU = U_1 - U_2 \text{ in Volts}$$

$$DU = \frac{U_1 - U_2}{U_1} \times 100 \text{ in } \%$$

In D.C. : $DU = 2 \rho RI$

In Single phase : $DU = 2 \rho I (R \cos \varphi + LW \sin \varphi)$

In three phase : $DU = \rho I\sqrt{3} (R \cos \varphi + LW \sin \varphi)$

Where

DU	=	Voltage drop in volt
l	=	Cable length in km
I	=	Current rating in Amper
R	=	Conductor resistance at the maximum operating temperature in Ohm/km
L	=	Inductance in H/km
W	=	Pulsation = 2 πF = 314 for F = 50 Hz
cos φ	=	Power factor

4.6 CONDUCTORS SHORT - CIRCUIT CURRENT

Current densities given in the table below are in (A / mm²), for different insulation materials and different overload time.

material	**Temperature of conductors**		**Current density (A / mm²)**									
			Conductor metal									
			Copper					**Aluminium**				
	Initial ˚C	**Final ˚C**	**overload in secs**									
			0.1	0.2	0.5	1	2	0.1	0.2	0.5	1	2
PE	20	150	446	315	199	141	99	294	208	131	93	66
	30		424	300	189	134	95	278	197	125	88	63
	70		375	237	150	106	75	221	156	99	70	49
PVC	20	160	458	324	205	145	102	304	215	135	96	68
	30		436	309	195	138	98	284	210	127	90	64
	70		351	248	158	111	79	231	163	104	73	52
XLPE	20	250	557	394	249	176	124	367	260	164	116	82
	30		538	380	241	170	120	354	254	159	112	79
	90		439	311	196	139	98	288	203	129	91	65

For an overload duration (t) different than those figured in the above table, the correspondant current density is given by the following formula :

$$\text{Current density for a duration (t)} = \frac{\text{Current density for 1 sec}}{\sqrt{t}}$$

4.7 MINIMUM BENDING RADIUS

Listed values represent the permanent bending radius the cables withstand in fixed installation and on dispatching reels. Other constraints may impose greater bending radius.

	Cable on drum	**Cable during installation**	**Installed Cable**
Unarmoured single core cables	9 D	18 D	9 D
Unarmoured multi core cables	6 D	12 D	6 D
Armoured cables - steel tapes	8 D	16 D	8 D
- steel wires	10 D	20 D	10 D
	D = Overall diameter in mm		

5 INDUSTRIAL AND DISTRIBUTION 0.6 / 1KV POWER CABLES

5.1 UNARMOURED, PVC OR XLPE INSULATED AND PVC SHEATHED CABLES

1. SCOPE

This specification covers single, two, three or four core cables, PVC or XLPE insulated and PVC sheathed, rated at 0.6/1 KV, unarmoured type to International Electrotechnical Commission Publication IEC 60502-1 for use in cable ducts and indoors and for underground burial, where they are not likely to suffer mechanical damage.

The cables have excellent thermal properties, high dielectric strength and high resistance to ageing, abrasion, moisture, chemicals, acids and oils.

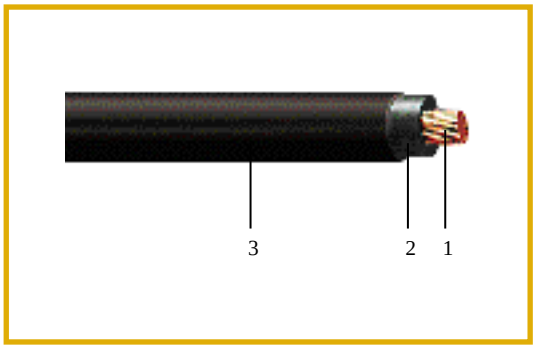

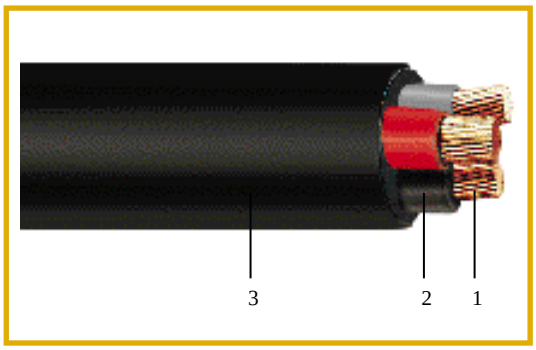

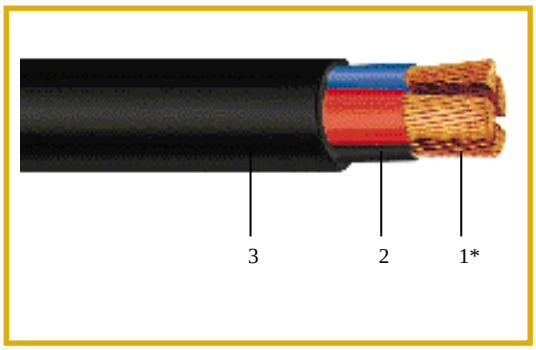

1	Stranded circular copper or aluminium conductor *stranded sectoral copper or aluminium conductor
2	PVC or XLPE insulation
3	PVC Sheath

2. CONSTRUCTION

2.1 Conductor

Plain, annealed electrolytic copper or aluminium conductors, solid, circular stranded, or sectoral stranded; conforming to the applicable requirements of IEC 228.

2.2 Insulation

PVC based thermoplastic or XLPE thermosetting material, conforming to the applicable requirements of IEC 60502-1.

2.3 Assembly

Insulated conductors are laid up, filled where necessary with non-hygroscopic material and covered with an additional layer of extruded thermoplastic material or non-hygroscopic binding tape.

2.4 Sheath

PVC based thermoplastic material, conforming to the applicable requirements of IEC 60502-1.

2.5 TESTS

Conforming to the applicable requirements of IEC 60502-1 either on raw materials or on finished products.

UNARMOURED, PVC INSULATED, PVC SHEATHED
0.6 / 1 KV POWER CABLES
Conforming to IEC 60502-1

DIMENSIONAL CHARACTERISTICS

Nominal cross section*	Radial Thickness of		Nominal Diameters			Approximative net weight				Length on drum
						Copper cable		Aluminium cable		
	Insulation	Outer Sheath	Conductor	Insulation	Overall	Conductor	Cable	Conductor	Cable	
mm^2	mm	mm	mm	mm	mm	Kg/Km	Kg/Km	Kg/Km	Kg/Km	m
SINGLE CORE										
1 x 1.5	0.8	1.4	1.38	2.98	5.9	13	49	...	...	1000
1 x 2.5	0.8	1.4	1.78	3.38	6.3	22	62	...	...	1000
1 x 4	1.0	1.4	2.25	4.25	7.2	35	86	...	...	1000
1 x 6	1.0	1.4	2.95	4.95	7.9	53	113	...	...	1000
1 x 10	1.0	1.4	3.82	5.82	8.7	89	160	28	99	1000
1 x 16	1.0	1.4	4.83	6.83	9.8	141	225	43	127	1000
1 x 25	1.2	1.4	6.02	8.42	12	223	332	68	177	500
1 x 35	1.2	1.4	7.15	9.55	13	309	434	95	220	500
1 x 50	1.4	1.4	8.30	11.10	14	418	565	128	275	500
1 x 70	1.4	1.4	10.00	12.80	16	604	775	185	356	500
1 x 95	1.6	1.5	11.80	15.00	19	838	1060	256	478	500
1 x 120	1.6	1.5	13.30	16.50	20	1059	1300	324	565	500
1 x 150	1.8	1.6	14.80	18.40	22	1299	1590	398	690	500
1 x 185	2.0	1.7	16.55	20.55	25	1630	1990	499	860	500
1 x 240	2.2	1.8	19.40	23.80	28	2143	2590	655	1100	500
1 x 300	2.4	1.9	21.30	26.10	31	2688	3210	822	1340	500
1 x 400	2.6	2.0	24.10	29.30	34	3439	4070	1051	1680	500
1 x 500	2.8	2.1	27.3	32.90	38	4335	5100	1325	2090	500
1 x 630	2.8	2.2	31.0	36.60	42	5597	6450	1710	2560	500
1 x 800	2.8	2.3	37.1	42.70	48	7203	8250	2188	3240	250
TWO CORE										
2 x 1.5	0.8	1.8	1.38	2.98	11	27	131	...	...	1000
2 x 2.5	0.8	1.8	1.78	3.38	11	44	164	...	...	1000
2 x 4	1.0	1.8	2.25	4.25	13	70	233	...	...	1000
2 x 6	1.0	1.8	2.95	4.95	15	107	306	...	...	1000
2 x 10	1.0	1.8	3.82	5.82	16	179	425	55	301	1000
2 x 16	1.0	1.8	4.83	6.83	19	284	590	87	393	1000
2 x 25	1.2	1.8	6.02	8.42	22	450	870	138	560	500
2 x 35	1.2	1.8	7.15	9.55	24	624	1130	191	695	500

* - Solid conductor for sizes up to and including 4 mm^2.
- Stranded sectoral conductor for sizes of 35 mm^2 and above in three and four core cables.
- Stranded circular conductor for remaining sizes.
- Grater sections also available

UNARMOURED, PVC INSULATED, PVC SHEATHED
0.6 / 1 KV POWER CABLES
Conforming to IEC 60502-1

DIMENSIONAL CHARACTERISTICS

Nominal cross section*	Radial Thickness of		Nominal Diameters			Approximative net weight				Length on drum
						Copper cable		Aluminium cable		
	Insulation	Outer Sheath	Conductor	Insulation	Overall	Conductor	Cable	Conductor	Cable	
mm^2	mm	mm	mm	mm	mm	Kg/Km	Kg/Km	Kg/Km	Kg/Km	m
THREE CORE										
3 x 1.5	0.8	1.8	1.38	2.98	11	40	152	...	...	1000
3 x 2.5	0.8	1.8	1.78	3.38	12	66	194	...	...	1000
3 x 4	1.0	1.8	2.25	4.25	14	105	279	...	...	1000
3 x 6	1.0	1.8	2.95	4.95	15	160	373	...	...	1000
3 x 10	1.0	1.8	3.82	5.82	17	269	530	82	343	1000
3 x 16	1.0	1.8	4.83	6.83	20	426	750	130	454	1000
3 x 25	1.2	1.8	6.02	8.42	23	675	1120	206	650	500
3 x 35	1.2	1.8	shaped	shaped	24	945	1310	289	655	500
3 x 50	1.4	1.8	shaped	shaped	27	1279	1730	391	840	500
3 x 70	1.4	1.9	shaped	shaped	30	1848	2390	565	1110	500
3 x 95	1.6	2.1	shaped	shaped	35	2562	3280	783	1500	500
3 x 120	1.6	2.2	shaped	shaped	38	3242	4060	990	1810	250
3 x 150	1.8	2.3	shaped	shaped	44	3978	5000	1216	2240	250
3 x 185	2.0	2.5	shaped	shaped	46	4990	6200	1525	2740	250
3 x 240	2.2	2.7	shaped	shaped	52	6557	8050	2004	3500	250
3 x 300	2.4	2.9	shaped	shaped	59	8226	10050	2514	4340	250
FOUR CORE										
4 x 1.5	0.8	1.8	1.38	2.98	12	53	180	...	...	1000
4 x 2.5	0.8	1.8	1.78	3.38	13	88	232	...	...	1000
4 x 4	1.0	1.8	2.25	4.25	15	140	337	...	...	1000
4 x 6	1.0	1.8	2.95	4.95	17	213	456	...	...	1000
4 x 10	1.0	1.8	3.82	5.82	19	358	655	110	310	1000
4 x 16	1.0	1.8	4.83	6.83	21	568	940	174	545	1000
4 x 25	1.2	1.8	6.02	8.42	25	900	1410	275	785	500
4 x 35	1.2	1.8	shaped	shaped	27	1259	1730	385	855	500
4 x 50	1.4	1.9	shaped	shaped	30	1705	2320	521	1140	500
4 x 70	1.4	2.1	shaped	shaped	34	2464	3220	754	1510	500
4 x 95	1.6	2.2	shaped	shaped	39	3417	4400	1044	2030	500
4 x 120	1.6	2.3	shaped	shaped	43	4323	5450	1320	2450	250
4 x 150	1.8	2.5	shaped	shaped	47	5305	6650	1621	2970	250
4 x 185	2.0	2.7	shaped	shaped	53	6654	8350	2033	3730	250
4 x 240	2.2	2.9	shaped	shaped	59	8743	10800	2672	4730	250
4 x 300	2.4	3.2	shaped	shaped	66	10969	13500	3352	5900	250

UNARMOURED, PVC INSULATED, PVC SHEATHED
0.6 / 1 KV POWER CABLES
Conforming to IEC 60502-1

Nominal cross section*	Radial Thickness of		Nominal Diameters			Approximative net weight				Length on drum
						Copper cable		Aluminium cable		
	Insulation	Outer Sheath	Conductor	Insulation	Overall	Conductor	Cable	Conductor	Cable	
mm^2	mm	mm	mm	mm	mm	Kg/Km	Kg/Km	Kg/Km	Kg/Km	m
FOUR CORE WITH REDUCED NEUTRAL										
3 x Ph. +N.	Ph.	N.		Ph. N.	Ph. N.					
3 x 25+16	1.2	1.0	1.8	6.02 4.83	8.42 6.83	24	817	1320	249	750	500
3 x 35 + 16	1.2	1.0	1.8	shaped 4.83	shaped 6.83	26	1086	1530	333	775	500
3 x 50 + 25	1.4	1.2	1.9	shaped 6.02	shaped 8.42	29	1504	2080	460	1040	500
3 x 70 + 35	1.4	1.2	2.0	shaped	shaped	32	2163	2850	662	1350	500
3 x 95 + 50	1.6	1.4	2.2	shaped	shaped	38	2989	3890	914	1820	500
3 x 120+70	1.6	1.4	2.3	shaped	shaped	41	3858	4890	1179	2210	250
3 x 150+70	1.8	1.4	2.4	shaped	shaped	44	4595	5800	1404	2610	250
3 x 185+95	2.0	1.6	2.6	shaped	shaped	50	5845	7350	1786	3290	250
3x240+120	2.2	1.6	2.8	shaped	shaped	56	7638	9500	2334	4200	250
3x300+150	2.4	1.8	3.0	shaped	shaped	62	9552	11800	2919	5150	250

* - Solid conductor for sizes up to and including 4 mm^2.
- Stranded sectoral conductor for sizes of 35 mm^2 and above in three and four core cables.
- Stranded circular conductor for remaining sizes.
- Grater sections also available

CONCENTRIC CONDUCTOR PVC INSULATED, PVC SHEATHED
0.6 / 1 KV POWER CABLES
Conforming to VDE 271 / 3.69
TYPE : NYCY

DIMENSIONAL CHARACTERISTICS

Nominal cross section*	Radial Thickness of		Nominal Diameters			Approximative net weight		Length on drum
	Insulation	Outer Sheath	Conductor	Insulation	Overall	Conductor	Cable	
mm²	mm	mm	mm	mm	mm	Kg/Km	Kg/Km	m
TWO CORE								
1x 2.5 +2.5	0.9	1.8	1.78	3.58	9.3	43	112	1000
1 x 4 + 4	1.0	1.8	2.25	4.25	9.0	69	147	1000
1 x 6 + 6	1.0	1.8	2.95	4.95	9.9	101	197	1000
1 x 10 +10	1.0	1.8	3.82	5.82	12	175	287	1000
1 x 16 + 16	1.0	1.8	4.83	6.83	13	283	413	1000
1 x 25 + 25	1.2	1.8	6.02	8.42	15	443	580	1000
FOUR CORE								
3x 2.5 + 2.5	0.9	0.8	1.8	1.78	3.58	15	87	315	1000
3 x 4 + 4	1.0	0.8	1.8	2.25	4.25	17	130	380	1000
3 x 6 + 6	1.0	0.8	1.8	2.95	4.95	18	207	505	1000
3 x 10 + 10	1.0	0.8	1.8	3.82	5.82	21	353	710	1000
3 x 16 + 16	1.0	1.2	1.8	4.83	6.83	24	567	1030	1000
3 x 25 + 25	1.2	2.2	2.0	6.02	8.42	29	902	1530	500

* - Solid conductor for sizes up to and including 4 mm².
- Stranded circular conductor for sizes of 6 mm² and above.
- Greater sections also available

ELECTRICAL CHARACTERISTICS

Nominal cross section	DC Resistance at 20˚C*	Voltage Drop Cos φ = 0.8		Current carrying capacity**			
				Underground Cable		Cables in air	
		Two Core	Three core	Two Core	Three core	Two Core	Three core
mm²	Ω/Km	V/A x Km	V/A x Km	Amp	Amp	Amp	Amp
2.5	7.41	14.2	12.3	41	36	26	24
4	4.61	9.0	7.8	53	46	35	32
6	3.08	6.1	5.3	67	58	46	41
10	1.83	3.7	3.2	91	79	63	57
16	1.15	2.3	2.0	115	100	85	76
25	0.727	1.5	1.3	146	132	112	100

* At different operating T(˚C) : R = R20˚C {1+ α (T˚C - 20)}
α : Temperature coefficient at 20˚C = 0.00393 for copper & 0.00403 for aluminium

** Laying conditions : - Underground : Temperature of the soil 20˚C - Thermal resistivity 100˚C cm/w
- In air : Ambient temperature 30˚C

5.4 SELF SUPPORTED, AERIAL, PVC OR XLPE INSULATED, 0.6 / 1 KV POWER CABLES

1. SCOPE

This specification covers PVC or XLPE insulated, multicore, self supporting cables rated 0.6/1KV; for use outdoors in overhead and surface mounting applications on walls, in street lighting and other overhead electrical applications. These cables have high dielectric strength, excellent aging, thermal, chemical and mechanical properties which make them highly resistant to the most strenuous weather conditions.

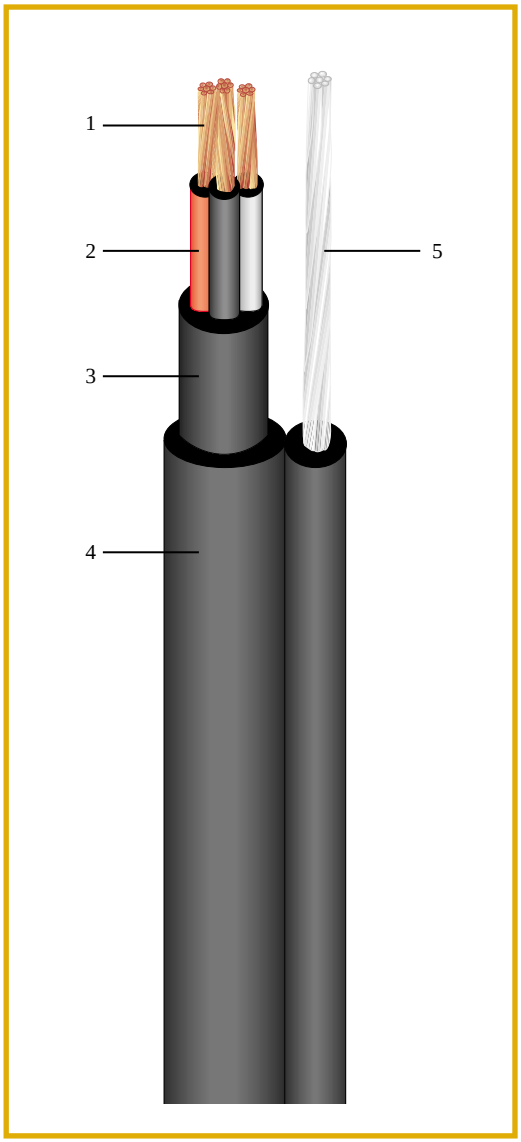

1	Stranded circular copper or aluinium conductor
2	PVC or XLPE insulation
3	Bedding
4	PVC sheath
5	Stranded galvanized steel wires

2. CONSTRUCTION

2.1 Conductor

Plain, annealed electrolytic copper or aluminium conductors, solid, circular stranded conforming to the applicable requirements of IEC 60228.

2.2 Insulation

PVC based thermoplastic or XLPE thermosetting material conforming to the applicable requirements of VDE 0209.

2.3 Assembly

Insulated conductors are laid up, filled with non-hygroscopic material and covered with an extruded thermoplastic material or a PVC binding tape.

2.4 Suspension strand

Torsion free strand of galvanized steel wires, laid up together parallel to the assembly of cores under a common PVC sheath.

2.5 Sheath

PVC based thermoplastic material simultaneously covering steel supporter and assembly of cores and conforming to the applicable requirements of VDE 0209.

2.6 TESTS

Conforming to the applicable requirements of relative specifications.

SELF SUPPORTED AERIAL
PVC INSULATED, PVC SHEATHED
0.6 / 1 KV POWER CABLES
Conforming to VDE 0271 / 3.69

DIMENSIONAL CHARACTERISTICS

Nominal cross section*	Radial Thickness of Insulation	Size of the steel messenger	Sheath	Nominal Diameters			Approximative net weight				Length on drum
							Copper cable		Aluminium cable		
				Conductor	Insulation	Overall	Conductor	Cable	Conductor	Cable	
mm²	mm	nbr./dia	mm	mm	mm	mm	Kg/Km	Kg/Km	Kg/Km	Kg/Km	m
TWO CORE											
2 x 1.5	0.8	7/1.2	1.8	1.38	2.98	7.2 11 21	27	252	...	...	1000
2 x 2.5	0.8	7/1.2	1.8	1.78	3.38	7.2 12 22	44	285	...	...	1000
2 x 4	1.0	7/1.2	1.8	2.25	4.25	7.2 14 24	70	352	...	...	1000
2 x 6	1.0	7/1.2	1.8	2.95	4.95	7.2 15 25	107	427	...	...	1000
2 x 10	1.0	7/1.2	1.8	3.82	5.82	7.2 17 27	179	545	55	421	1000
2 x 16	1.0	7/1.2	1.8	4.83	6.83	7.2 19 29	284	710	87	515	1000
2 x 25	1.2	7/1.2	1.8	6.02	8.42	7.2 22 32	450	990	138	680	500
THREE CORE											
3 x 1.5	0.8	7/1.2	1.8	1.38	2.98	7.2 12 22	40	273	...	...	1000
3 x 2.5	0.8	7/1.2	1.8	1.78	3.38	7.2 13 23	66	315	...	...	1000
3 x 4	1.0	7/1.2	1.8	2.25	4.25	7.2 14 24	105	400	...	...	1000
3 x 6	1.0	7/1.2	1.8	2.95	4.95	7.2 16 26	160	494	...	...	1000
3 x 10	1.0	7/1.2	1.8	3.82	5.82	7.2 18 28	269	650	82	463	1000
3 x 16	1.0	7/1.2	1.8	4.83	6.83	7.2 20 30	426	870	130	575	1000
3 x 25	1.2	7/1.2	1.8	6.02	8.42	7.2 23 33	675	1240	206	770	500
FOUR CORE											
4 x 1.5	0.8	7/1.2	1.8	1.38	2.98	7.2 12 22	53	301	...	...	1000
4 x 2.5	0.8	7/1.2	1.8	1.78	3.38	7.2 14 24	88	353	...	...	1000
4 x 4	1.0	7/1.2	1.8	2.25	4.25	7.2 15 25	140	458	...	...	1000
4 x 6	1.0	7/1.2	1.8	2.95	4.95	7.2 17 27	213	575	...	...	1000
4 x 10	1.0	7/1.2	1.8	3.82	5.82	7.2 19 29	358	775	110	525	1000
4 x 16	1.0	7/1.2	1.8	4.83	6.83	7.2 22 32	568	1060	174	665	1000
4 x 25	1.2	7/1.2	1.8	6.02	8.42	7.2 26 36	900	1530	275	905	500

* - Solid conductor for sizes up to and including 4 mm².
- Stranded circular conductor for remaining sizes.
- Different sections also available.

SELF SUPPORTED AERIAL
PVC INSULATED, PVC SHEATHED
0.6 / 1 KV POWER CABLES
Conforming to VDE 0271 / 3.69

ELECTRICAL CHARACTERISTICS

Nominal cross section	DC Resistance at 20˚C (1)		Voltage Drop (2) Cos φ = 0.8		Current carrying capacity (3)	
	Copper	Alu	Copper	Alu	Copper	Alu
mm^2	Ω/Km	Ω/Km	V/A x Km	V/A x Km	Amp	Amp
1.5	12.1	...	23.3	...	22	...
2.5	7.41	...	14.2	...	30	...
4	4.61	...	9.0	...	40	...
6	3.08	...	6.1	...	52	...
10	1.83	3.08	3.7	6.1	71	55
16	1.15	1.91	2.3	3.8	96	75
25	0.727	1.20	1.5	2.4	127	99

(1) At different operating T(˚C) : R = R20˚C {1+ α (T˚C - 20)}
α : Temperature coefficient at 20˚C = 0.00393 for copper & 0.00403 for aluminium
(2) In three phase system decrease above listed voltage drop by 15%
(3) Ambient temperature 30˚C

SELF SUPPORTED AERIAL
XLPE INSULATED, PVC SHEATHED
0.6 / 1 KV POWER CABLES
Conforming to VDE 0271 / 3.69

DIMENSIONAL CHARACTERISTICS

Nominal cross section*	Radial Thickness of Insulation	Size of the steel messenger	Sheath	Nominal Diameters			Approximative net weight				Length on drum
							Copper cable		Aluminium cable		
				Conductor	Insulation	Overall	Conductor	Cable	Conductor	Cable	
mm²	mm	nbr./dia	mm	mm	mm	mm	Kg/Km	Kg/Km	Kg/Km	Kg/Km	m
TWO CORE											
2 x 1.5	0.7	7/1.2	1.8	1.38	2.78	7.2 10 20	27	241	...	...	1000
2 x 2.5	0.7	7/1.2	1.8	1.78	3.18	7.2 11 21	44	272	...	...	1000
2 x 4	0.7	7/1.2	1.8	2.25	3.65	7.2 12 22	70	316	...	...	1000
2 x 6	0.7	7/1.2	1.8	2.95	4.35	7.2 13 23	107	383	...	...	1000
2 x 10	0.7	7/1.2	1.8	3.82	5.22	7.2 15 25	179	496	55	372	1000
2 x 16	0.7	7/1.2	1.8	4.83	6.23	7.2 17 27	284	650	87	1456	1000
2 x 25	0.9	7/1.2	1.8	6.02	7.82	7.2 21 31	450	915	138	1605	500
THREE CORE											
3 x 1.5	0.7	7/1.2	1.8	1.38	2.78	7.2 11 21	40	258	...	...	1000
3 x 2.5	0.7	7/1.2	1.8	1.78	3.18	7.2 12 22	66	299	...	...	1000
3 x 4	0.7	7/1.2	1.8	2.25	3.65	7.2 13 23	105	356	...	...	1000
3 x 6	0.7	7/1.2	1.8	2.95	4.35	7.2 14 24	160	441	...	...	1000
3 x 10	0.7	7/1.2	1.8	3.82	5.22	7.2 16 26	269	590	82	403	1000
3 x 16	0.7	7/1.2	1.8	4.83	6.23	7.2 18 28	426	795	130	500	1000
3 x 25	0.9	7/1.2	1.8	6.02	7.82	7.2 22 32	675	1140	206	670	500
FOUR CORE											
4 x 1.5	0.7	7/1.2	1.8	1.38	2.78	7.2 11 21	53	282	...	...	1000
4 x 2.5	0.7	7/1.2	1.8	1.78	3.18	7.2 12 22	88	333	...	...	1000
4 x 4	0.7	7/1.2	1.8	2.25	3.65	7.2 14 24	140	405	...	...	1000
4 x 6	0.7	7/1.2	1.8	2.95	4.35	7.2 15 25	213	510	...	...	1000
4 x 10	0.7	7/1.2	1.8	3.82	5.22	7.2 17 27	358	700	110	452	1000
4 x 16	0.7	7/1.2	1.8	4.83	6.23	7.2 20 30	568	970	174	575	1000
4 x 25	0.9	7/1.2	1.8	6.02	7.82	7.2 24 34	900	1410	275	785	500

* - Solid conductor for sizes up to and including 4 mm².
- Stranded circular conductor for remaining sizes.
- Different sections also available.

SELF SUPPORTED AERIAL
XLPE INSULATED, PVC SHEATHED
0.6 / 1 KV POWER CABLES
Conforming to VDE 0271 / 3.69

ELECTRICAL CHARACTERISTICS

Nominal cross section	DC Resistance at 20˚C (1)		Voltage Drop (2) Cos φ = 0.8		Current carrying capacity (3)	
	Copper	Alu	Copper	Alu	Copper	Alu
mm^2	Ω/Km	Ω/Km	V/A x Km	V/A x Km	Amp	Amp
1.5	12.1	...	24.8	...	27	...
2.5	7.41	...	14.8	...	37	...
4	4.61	...	9.2	...	50	...
6	3.08	...	6.2	...	64	...
10	1.83	3.08	3.7	6.1	88	69
16	1.15	1.91	2.4	3.9	119	93
25	0.727	1.20	1.6	2.5	157	122

(1) At different operating T(˚C) : R = R20˚C {1+ α (T˚C - 20)}
α : Temperature coefficient at 20˚C = 0.00393 for copper & 0.00403 for aluminium
(2) In three phase system decrease above listed voltage drop by 15%
(3) Ambient temperature 30˚C

5.5 CONTROL, PVC OR XLPE INSULATED AND PVC SHEATHED MULTICORE CABLES.

1. SCOPE

This specification covers multicore cables for signalisation and control purposes, PVC insulated and sheathed rated 0.6 / 1 KV; to International Electrotechnical Commission IEC 60502-1, for use in cable ducts and indoors and for underground burial. High resistance to deformations under high temperature and pressure, and high resistance to ageing, abrasion, moisture, chemicals, acids and oils.

2. CONSTRUCTION

2.1 Conductor

Plain, annealed electrolytic copper conductors, solid or circular stranded conforming to the applicable requirements of IEC 60228.

2.2 Insulation

PVC based thermoplastic or XLPE thermosetting material conforming to the applicable requirements of IEC 60502-1.

2.3 Assembly

Insulated conductors are laid up, filled where necessary with non-hygroscopic material or covered with a layer of non-hygroscopic tape.

The assembly is covered with an extruded layer of PVC in armoured cables.

2.4 Armour (in armoured cables)

Galvanized steel wires or double steel tapes, covering the assembly of cores, complying to the applicable requirements of IEC 60502-1.

2.5 Sheath

PVC based thermoplastic material conforming to the applicable requirements of IEC 60502-1.

2.6 TESTS

Conforming to the applicable requirements of IEC 60502-1 either on raw materials or on finished products.

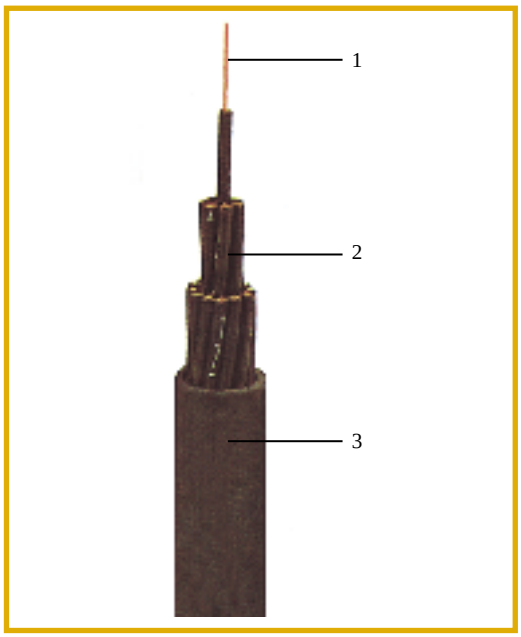

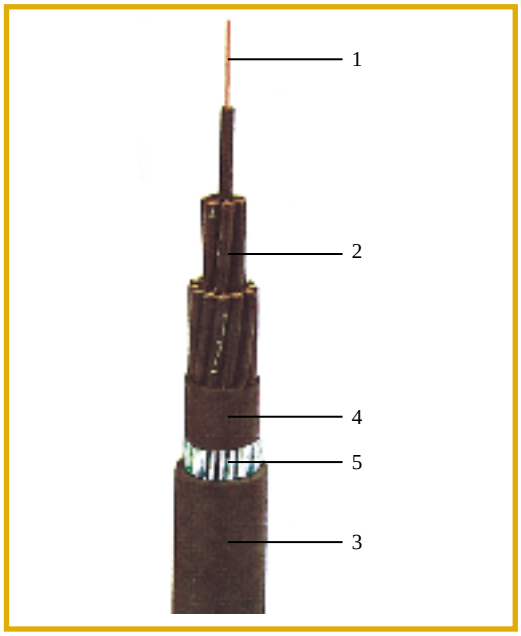

1	Solid circular copper conductor
2	PVC or XLPE insulation
3	PVC sheath
4	Bedding
5	Round galvanized steel wire armour

UNARMOURED, PVC INSULATED, PVC SHEATHED
0.6 / 1 KV CONTROLE CABLES
Conforming to IEC 60502-1

DIMENSIONAL CHARACTERISTICS

Number* of Conductors	Radial Thickness of		Nominal Diameters			Approximative net weight		Length on drum
	Insulation	Outer Sheath	Conductor	Insulation	Overall	Copper	Cable	
	mm	mm	mm	mm	mm	Kg/Km	Kg/Km	m
CONDUCTOR 1.5 mm²								
5	0.8	1.8	1.38	2.98	13	66	212	1000
7	0.8	1.8	1.38	2.98	14	92	244	1000
8	0.8	1.8	1.38	2.98	15	105	281	1000
10	0.8	1.8	1.38	2.98	17	131	332	1000
12	0.8	1.8	1.38	2.98	17	157	378	1000
14	0.8	1.8	1.38	2.98	18	184	428	1000
19	0.8	1.8	1.38	2.98	20	249	545	1000
24	0.8	1.8	1.38	2.98	23	314	680	1000
30	0.8	1.8	1.38	2.98	24	393	815	1000
37	0.8	1.8	1.38	2.98	26	484	975	1000
40	0.8	1.8	1.38	2.98	27	524	1050	500
48	0.8	1.9	1.38	2.98	29	628	1250	500
CONDUCTOR 2.5 mm²								
5	0.8	1.8	1.78	3.38	14	109	277	1000
7	0.8	1.8	1.78	3.38	15	153	325	1000
8	0.8	1.8	1.78	3.38	16	175	375	1000
10	0.8	1.8	1.78	3.38	18	218	448	1000
12	0.8	1.8	1.78	3.38	19	262	515	1000
14	0.8	1.8	1.78	3.38	20	305	585	1000
19	0.8	1.8	1.78	3.38	22	414	755	1000
24	0.8	1.8	1.78	3.38	25	523	940	1000
30	0.8	1.8	1.78	3.38	26	653	1140	1000
37	0.8	1.9	1.78	3.38	29	806	1390	1000
40	0.8	1.9	1.78	3.38	30	871	1500	500
48	0.8	2.0	1.78	3.38	33	1045	1790	500

* Greater number of conductors also available.

ARMOURED, PVC INSULATED, PVC SHEATHED
0.6 / 1 KV CONTROLE CABLES
Conforming to IEC 60502-1

DIMENSIONAL CHARACTERISTICS

Number* of Conductors	Radial Thickness of			Nominal Diameters			Approximative net weight		Length on drum
	Insulation	Inner Sheath	Outer Sheath	Conductor	Insulation	Overall	Copper	Cable	
	mm	mm	mm	mm	mm	mm	Kg/Km	Kg/Km	m
CONDUCTOR 1.5 mm²									
5	0.8	1.0	1.8	1.38	2.98	17	66	455	1000
7	0.8	1.0	1.8	1.38	2.98	18	92	520	1000
8	0.8	1.0	1.8	1.38	2.98	19	105	575	1000
10	0.8	1.0	1.8	1.38	2.98	21	131	670	1000
12	0.8	1.0	1.8	1.38	2.98	23	147	1030	1000
14	0.8	1.0	1.8	1.38	2.98	24	184	1080	1000
19	0.8	1.0	1.8	1.38	2.98	25	249	1260	1000
24	0.8	1.0	1.8	1.38	2.98	28	314	1500	1000
30	0.8	1.0	1.9	1.38	2.98	30	393	1700	500
37	0.8	1.0	1.9	1.38	2.98	32	484	1920	500
40	0.8	1.0	2.0	1.38	2.98	33	524	2020	500
48	0.8	1.0	2.1	1.38	2.98	36	628	2560	500
CONDUCTOR 2.5 mm²									
5	0.8	1.0	1.8	1.78	3.38	18	109	535	1000
7	0.8	1.0	1.8	1.78	3.38	19	153	625	1000
8	0.8	1.0	1.8	1.78	3.38	20	175	700	1000
10	0.8	1.0	1.8	1.78	3.38	24	218	1110	1000
12	0.8	1.0	1.8	1.78	3.38	25	262	1200	1000
14	0.8	1.0	1.8	1.78	3.38	25	305	1310	1000
19	0.8	1.0	1.8	1.78	3.38	27	414	1550	1000
24	0.8	1.0	1.9	1.78	3.38	31	523	1870	500
30	0.8	1.0	2.0	1.78	3.38	33	653	2130	500
37	0.8	1.0	2.1	1.78	3.38	36	806	2690	500
40	0.8	1.2	2.1	1.78	3.38	37	871	2890	500
48	0.8	1.2	2.2	1.78	3.38	40	1045	3310	500

* Greater number of conductors also available.

UNARMOURED, PVC INSULATED, PVC SHEATHED
0.6 / 1 KV POWER CABLES
Conforming to IEC 60502-1

ELECTRICAL CHARACTERISTICS

Nominal cross section	DC Resistance at 20˚C (1)		Voltage Drop (2) Cos φ = 0.8		Current carrying capacity (3)			
					Underground Cable		Cables in air	
	Copper	Alu	Copper	Alu	Copper	Alu	Copper	Alu
mm²	Ω/Km	Ω/Km	V/A x Km	V/A x Km	Amp	Amp	Amp	Amp
1.5	12.1	...	23.3	...	30	...	22	...
2.5	7.41	...	14.2	...	41	...	30	...
4	4.61	...	9.0	...	53	...	40	...
6	3.08	...	6.1	...	67	...	52	...
10	1.83	3.08	3.7	6.1	91	67	71	55
16	1.15	1.91	2.3	3.8	115	90	96	75
25	0.727	1.20	1.5	2.4	146	114	127	99
35	0.524	0.868	1.1	1.7	176	137	157	125
50	0.387	0.641	0.9	1.4	212	165	190	151
70	0.268	0.443	0.6	1.0	261	204	242	192
95	0.193	0.320	0.5	0.7	313	244	293	232
120	0.153	0.253	0.4	0.6	358	279	339	269
150	0.124	0.206	0.4	0.5	400	312	390	309
185	0.0991	0.164	0.3	0.4	451	352	444	353
240	0.0754	0.125	0.3	0.3	522	407	522	415
300	0.0601	0.100	0.2	0.3	590	460	595	472
400	0.0470	0.0778	0.2	0.2	680	530	695	552
500	0.0366	0.0605	0.2	0.2	769	599	780	618
630	0.0283	0.0469	0.2	0.2	870	678	885	705
800	0.0221	0.0367	0.2	0.2	979	763	990	790

(1) At different operating T(˚C) : R = R20˚C {1+ α (T˚C - 20)}
α : Temperature coefficient at 20˚C = 0.00393 for copper & 0.00403 for aluminium

(2) In three phase system decrease above listed voltage drop by 15%

(3) a) Laying conditions : - Underground : Temperature of the soil 20˚C - Thermal resistivity 100˚C cm/w
- In air : Ambient temperature 30˚C

b) In three phase system decrease above listed current ratings by 10%

UNARMOURED, XLPE INSULATED, PVC SHEATHED
0.6 / 1 KV POWER CABLES
Conforming to IEC 60502-1

DIMENSIONAL CHARACTERISTICS

Nominal cross section*	Radial Thickness of		Nominal Diameters			Approximative net weight				Length on drum
						Copper cable		Aluminium cable		
	Insulation	Outer Sheath	Conductor	Insulation	Overall	Conductor	Cable	Conductor	Cable	
mm^2	mm	mm	mm	mm	mm	Kg/Km	Kg/Km	Kg/Km	Kg/Km	m
SINGLE CORE										
1 x 1.5	0.7	1.4	1.38	2.78	5.7	13	45	...	...	1000
1 x 2.5	0.7	1.4	1.78	3.18	6.1	22	57	...	...	1000
1 x 4	0.7	1.4	2.25	3.65	6.6	35	74	...	...	1000
1 x 6	0.7	1.4	2.95	4.35	7.3	53	99	...	...	1000
1 x 10	0.7	1.4	3.82	5.22	8.1	89	144	28	83	1000
1 x 16	0.7	1.4	4.83	6.23	9.2	141	206	43	108	1000
1 x 25	0.9	1.4	6.02	7.82	11	223	307	68	152	500
1 x 35	0.9	1.4	7.15	8.95	12	309	406	95	192	500
1 x 50	1.0	1.4	8.30	10.3	14	418	525	128	235	500
1 x 70	1.1	1.4	10.00	12.20	16	604	735	185	316	500
1 x 95	1.1	1.5	11.80	14.00	18	838	1000	256	418	500
1 x 120	1.2	1.5	13.30	15.70	19	1059	1240	324	505	500
1 x 150	1.4	1.6	14.80	17.60	21	1299	1520	398	620	500
1 x 185	1.6	1.6	16.55	19.75	24	1630	1890	499	760	500
1 x 240	1.7	1.7	19.40	22.80	27	2143	2460	655	970	500
1 x 300	1.8	1.8	21.30	24.90	29	2688	3060	822	1190	500
1 x 400	1.9	1.9	24.10	28.10	33	3439	3890	1051	1500	500
1 x 500	2.2	2.0	27.00	31.70	36	4335	4870	1325	1860	500
1 x 630	2.4	2.2	31.00	35.80	41	5597	6250	1710	2370	500
1 x 800	2.6	2.3	37.10	42.30	48	7203	8050	2188	3040	250
TWO CORE										
2 x 1.5	0.7	1.8	1.38	2.78	10	27	120	...	...	1000
2 x 2.5	0.7	1.8	1.78	3.18	11	44	151	...	...	1000
2 x 4	0.7	1.8	2.25	3.65	12	70	195	...	...	1000
2 x 6	0.7	1.8	2.95	4.35	13	107	262	...	...	1000
2 x 10	0.7	1.8	3.82	5.22	15	179	375	55	251	1000
2 x 16	0.7	1.8	4.83	6.23	17	284	530	87	333	1000
2 x 25	0.9	1.8	6.02	7.82	21	450	795	138	483	500
2 x 35	0.9	1.8	7.15	8.95	23	624	1040	191	605	500

* - Solid conductor for sizes up to and including 4 mm^2.
- Stranded sectoral conductor for sizes of 35 mm^2 and above in three and four core cables.
- Stranded circular conductor for remaining sizes.
- Grater sections also available

UNARMOURED, XLPE INSULATED, PVC SHEATHED
0.6 / 1 KV POWER CABLES
Conforming to IEC 60502-1

DIMENSIONAL CHARACTERISTICS

Nominal cross section*	Radial Thickness of		Nominal Diameters			Approximative net weight				Length on drum
						Copper cable		Aluminium cable		
	Insulation	Outer Sheath	Conductor	Insulation	Overall	Conductor	Cable	Conductor	Cable	
mm^2	mm	mm	mm	mm	mm	Kg/Km	Kg/Km	Kg/Km	Kg/Km	m
THREE CORE										
3 x 1.5	0.7	1.8	1.38	2.78	11	40	137	...	...	1000
3 x 2.5	0.7	1.8	1.78	3.18	12	66	178	...	...	1000
3 x 4	0.7	1.8	2.25	3.65	13	105	235	...	...	1000
3 x 6	0.7	1.8	2.95	4.35	14	160	320	...	...	1000
3 x 10	0.7	1.8	3.82	5.22	16	269	470	82	283	1000
3 x 16	0.7	1.8	4.83	6.23	18	426	675	130	379	1000
3 x 25	0.9	1.8	6.02	7.82	22	675	1020	206	550	500
3 x 35	0.9	1.8	shaped	shaped	22	945	1220	289	565	500
3 x 50	1.0	1.8	shaped	shaped	25	1278	1610	391	725	500
3 x 70	1.1	1.9	shaped	shaped	29	1848	2270	565	985	500
3 x 95	1.1	2.0	shaped	shaped	32	2562	3060	783	1280	500
3 x 120	1.2	2.1	shaped	shaped	36	3242	3840	990	1590	250
3 x 150	1.4	2.3	shaped	shaped	42	3978	4760	1216	2000	250
3 x 185	1.6	2.4	shaped	shaped	44	4990	5900	1525	2440	250
3 x 240	1.7	2.6	shaped	shaped	50	6557	7650	2004	3100	250
3 x 300	1.8	2.8	shaped	shaped	54	8325	9550	2514	3740	250
FOUR CORE										
4 x 1.5	0.7	1.8	1.38	2.78	11	53	161	...	...	1000
4 x 2.5	0.7	1.8	1.78	3.18	12	88	212	...	...	1000
4 x 4	0.7	1.8	2.25	3.65	14	140	284	...	...	1000
4 x 6	0.7	1.8	2.95	4.35	15	213	391	...	...	1000
4 x 10	0.7	1.8	3.82	5.22	17	358	580	110	332	1000
4 x 16	0.7	1.8	4.83	6.23	20	568	850	174	456	1000
4 x 25	0.9	1.8	6.02	7.82	24	900	1290	275	665	500
4 x 35	0.9	1.8	shaped	shaped	25	1259	1620	385	745	500
4 x 50	1.0	1.9	shaped	shaped	28	1705	2150	521	965	500
4 x 70	1.1	2.0	shaped	shaped	33	2464	3030	754	1320	500
4 x 95	1.1	2.1	shaped	shaped	37	3417	4100	1044	1730	500
4 x 120	1.2	2.3	shaped	shaped	41	4323	5150	1320	2150	250
4 x 150	1.4	2.4	shaped	shaped	45	5305	6350	1621	2670	250
4 x 185	1.6	2.6	shaped	shaped	50	6654	7950	2023	3330	250
4 x 240	1.7	2.8	shaped	shaped	56	8743	10300	2672	4230	250
4 x 300	1.8	3.0	shaped	shaped	62	10969	12850	3352	5250	250

UNARMOURED, XLPE INSULATED, PVC SHEATHED
0.6 / 1 KV POWER CABLES
Conforming to IEC 60502-1

Nominal cross section *	Radial Thickness of			Nominal Diameters					Approximative net weight				Length on drum
									Copper cable		Aluminium cable		
	Insulation		Outer Sheath	Conductor		Insulation		Overall	Conductor	Cable	Conductor	Cable	
mm^2	mm		mm	mm		mm		mm	Kg/Km	Kg/Km	Kg/Km	Kg/Km	m
FOUR CORE WITH REDUCED NEUTRAL													
3 x Ph. +N.	Ph.	N.		Ph.	N.	Ph.	N.						
3 x 25+16	0.9	0.7	1.8	6.02	4.83	7.82	6.23	23	817	1200	249	630	500
3 x 35 + 16	0.9	0.7	1.8	shaped	4.83	shaped	6.23	24	1086	1420	333	665	500
3 x 50 + 25	1.0	0.9	1.8	shaped	6.02	shaped	7.82	26	1504	1910	460	865	500
3 x 70 + 35	1.1	0.9	1.9	shaped		shaped		31	2163	2670	662	1170	500
3 x 95 + 50	1.1	1.0	2.1	shaped		shaped		35	2989	3620	914	1500	500
3 x 120+70	1.2	1.1	2.2	shaped		shaped		39	3858	4630	1179	1950	250
3 x 150+70	1.4	1.1	2.3	shaped		shaped		42	4594	5500	1404	2310	250
3 x 185+95	1.6	1.1	2.5	shaped		shaped		47	5845	7000	1786	2940	250
3x240+120	1.7	1.2	2.7	shaped		shaped		53	7638	9000	2334	3700	250
3x300+150	1.8	1.4	2.9	shaped		shaped		59	9552	11200	2919	4570	250

* - Solid conductor for sizes up to and including 4 mm^2.
- Stranded sectoral conductor for sizes of 35 mm^2 and above in three and four core cables.
- Stranded circular conductor for remaining sizes.
- Grater sections also available

UNARMOURED, XLPE INSULATED, PVC SHEATHED
0.6 / 1 KV POWER CABLES
Conforming to IEC 60502-1

ELECTRICAL CHARACTERISTICS

Nominal cross section	DC Resistance at 20˚C (1)		Voltage Drop (2) Cos φ = 0.8		Current carrying capacity (3)			
					Underground Cable		Cables in air	
	Copper	Alu	Copper	Alu	Copper	Alu	Copper	Alu
mm²	Ω/Km	Ω/Km	V/A x Km	V/A x Km	Amp	Amp	Amp	Amp
1.5	12.1	...	24.8	...	34	...	27	...
2.5	7.41	...	14.8	...	46	...	37	...
4	4.61	...	9.2	...	59	...	50	...
6	3.08	...	6.2	...	74	...	64	...
10	1.83	3.08	3.7	6.1	101	79	88	69
16	1.15	1.91	2.4	3.9	128	100	119	93
25	0.727	1.20	1.6	2.5	162	126	157	122
35	0.524	0.868	1.2	1.9	195	152	194	151
50	0.387	0.641	0.87	1.4	235	183	235	183
70	0.268	0.443	0.64	1.0	290	226	299	234
95	0.193	0.320	0.48	0.75	347	271	362	282
120	0.153	0.253	0.40	0.60	397	310	419	327
150	0.124	0.206	0.35	0.50	444	346	481	375
185	0.0991	0.164	0.29	0.42	500	390	549	428
240	0.0754	0.125	0.24	0.33	578	452	645	503
300	0.0601	0.100	0.23	0.30	655	512	735	575
400	0.0470	0.0778	0.22	0.28	754	588	859	670
500	0.0366	0.0605	0.22	0.27	852	665	960	750
630	0.0283	0.0469	0.21	0.26	961	750	1096	855
800	0.0221	0.0367	0.21	0.26	1081	844	1235	955

(1) At different operating T(˚C) : R = R20˚C {1+ α (T˚C - 20)}
α : Temperature coefficient at 20˚C = 0.00393 for copper & 0.00403 for aluminium

(2) In three phase system decrease above listed voltage drop by 15%

(3) a) Laying conditions : - Underground : Temperature of the soil 20˚C - Thermal resistivity 100˚C cm/w
- In air : Ambient temperature 30˚C

b) In three phase system decrease above listed current ratings by 10%

5.2 ARMOURED, PVC OR XLPE INSULATED AND PVC SHEATHED CABLES

1. SCOPE

This specification covers PVC or XLPE insulated, circular, twin, three or four conductors armoured cables, rated at 0.6/1 KV to international Electrotechnical commission Publication IEC 60502-1 for use indoors, outdoors, in cable ducts, in water and for direct burial underground, where severe mechanical stresses are present. These cables have high dielectric strength, an excellent resistance to deformations under high temperature and pressure, and high resistance to ageing, abrasion, moisture, chemicals, acids and oils.

2. CONSTRUCTION

2.1 Conductor

Plain, annealed electrolytic copper or Aluminium conductors, solid, circular stranded, or sectoral stranded, conforming to the applicable requirements of IEC 60228.

2.2 Insulation

PVC based thermoplastic or XLPE thermosetting material, conforming to the applicable requirements of IEC 60502-1.

2.3 Assembly

Insulated conductors are laid up, filled where necessary with non-hygroscopic material and covered with an extruded thickness of thermoplastic material.

2.4 Armour

Galvanized round wires, or flat strips, completely covering the assembly of cores and a counter helix of galvanized steel tape on top; or two layers of steel tape, complying to the applicable requirements of IEC 60502-1.

2.5 Sheath

PVC based thermoplastic material, conforming to the applicable requirements of IEC 60502-1.

2.6 TESTS

Conforming to the applicable requirements of IEC 60502-1 either on Raw materials or on finished products.

5.2 ARMOURED, PVC OR XLPE INSULATED AND PVC SHEATHED CABLES

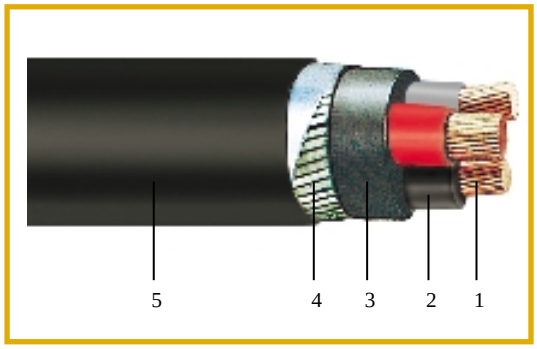

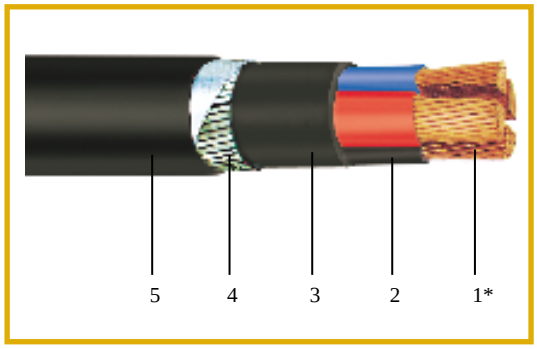

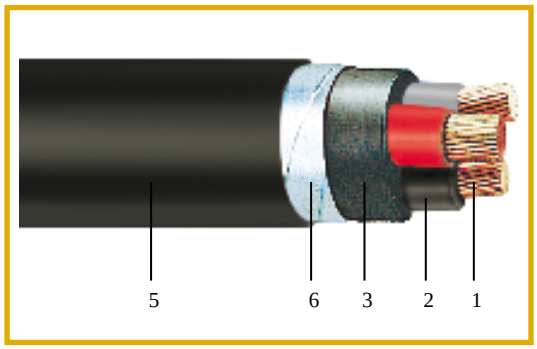

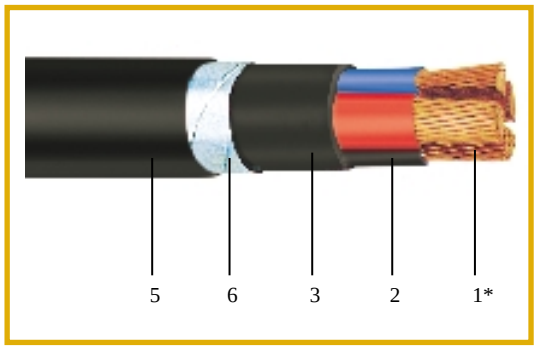

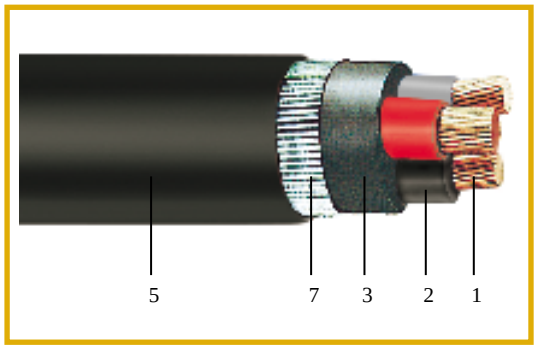

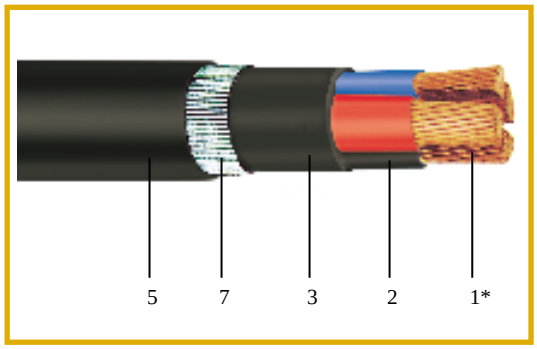

1	Stranded circular copper or aluminium conductor *stranded sectoral copper or aluminium conductor
2	PVC or XLPE insulation
3	Bedding
4	Galvanized flat steel strip armour with flat steel tape applied in helical form
5	PVC or PE sheath
6	Double steel tape armoured
7	Galvanized round steel wire armour

GALVANIZED STEEL WIRE ARMOURED
PVC INSULATED, PVC SHEATHED
0.6 / 1 KV POWER CABLES
Conforming to IEC 60502-1

DIMENSIONAL CHARACTERISTICS

Nominal cross section*	Radial Thickness of			Nominal Diameters			Approximative net weight				Length on drum
							Copper cable		Aluminium cable		
	Insulation	Inner Sheath	Outer Sheath	Conductor	Insulation	Overall	Conductor	Cable	Conductor	Cable	
mm^2	mm	mm	mm	mm	mm	mm	Kg/Km	Kg/Km	Kg/Km	Kg/Km	m
TWO CORE											
2 x 1.5	0.8	1.0	1.8	1.38	2.98	15	27	345	...	...	1000
2 x 2.5	0.8	1.0	1.8	1.78	3.38	16	44	394	...	...	1000
2 x 4	1.0	1.0	1.8	2.25	4.25	17	70	496	...	...	1000
2 x 6	1.0	1.0	1.8	2.95	4.95	19	107	605	...	...	1000
2 x 10	1.0	1.0	1.8	3.82	5.82	21	179	760	55	635	1000
2 x 16	1.0	1.0	1.8	4.83	6.83	24	284	1270	87	1070	1000
2 x 25	1.2	1.0	1.8	6.02	8.42	28	450	1660	138	1350	500
2 x 35	1.2	1.0	1.8	7.15	9.55	30	624	2000	191	1570	500
THREE CORE											
3 x 1.5	0.8	1.0	1.8	1.38	2.98	15	40	374	...	...	1000
3 x 2.5	0.8	1.0	1.8	1.78	3.38	16	66	434	...	...	1000
3 x 4	1.0	1.0	1.8	2.25	4.25	18	105	560	...	...	1000
3 x 6	1.0	1.0	1.8	2.95	4.95	20	160	685	...	...	1000
3 x 10	1.0	1.0	1.8	3.82	5.82	23	269	1170	82	985	1000
3 x 16	1.0	1.0	1.8	4.83	6.83	25	426	1470	130	1170	1000
3 x 25	1.2	1.0	1.8	6.02	8.42	29	675	1960	206	1490	500
3 x 35	1.2	1.0	1.9	shaped	shaped	29	945	2140	289	1480	500
3 x 50	1.4	1.0	2.1	shaped	shaped	34	1279	2920	391	2030	500
3 x 70	1.4	1.2	2.2	shaped	shaped	37	1848	3750	565	2470	500
3 x 95	1.6	1.2	2.3	shaped	shaped	42	2562	4800	783	3020	500
3 x 120	1.6	1.2	2.5	shaped	shaped	46	3242	6100	990	3850	250
3 x 150	1.8	1.4	2.6	shaped	shaped	52	3978	7350	1216	4590	250
3 x 185	2.0	1.4	2.8	shaped	shaped	55	4990	8700	1525	5200	250
3 x 240	2.2	1.4	3.0	shaped	shaped	61	6557	10800	2004	6250	250
3 x 300	2.4	1.6	3.2	shaped	shaped	66	8226	13100	2514	7400	250

* - Solid conductor for sizes up to and including 4 mm^2.
- Stranded sectoral conductor for sizes of 35 mm^2 and above in three and four core cables.
- Stranded circular conductor for remaining sizes.
- Greater sections also available

GALVANIZED STEEL WIRE ARMOURED
PVC INSULATED, PVC SHEATHED
0.6 / 1 KV POWER CABLES
Conforming to IEC 60502-1

Nominal cross section*	Radial Thickness of			Nominal Diameters			Approximative net weight				Length on drum
							Copper cable		Aluminium cable		
	Insulation	Inner Sheath	Outer Sheath	Conductor	Insulation	Overall	Conductor	Cable	Conductor	Cable	
mm^2	mm	mm	mm	mm	mm	mm	Kg/Km	Kg/Km	Kg/Km	Kg/Km	m
FOUR CORE											
4 x 1.5	0.8	1.0	1.8	1.38	2.98	16	53	417	...	...	1000
4 x 2.5	0.8	1.0	1.8	1.78	3.38	17	88	490	...	...	1000
4 x 4	1.0	1.0	1.8	2.25	4.25	19	140	640	...	...	1000
4 x 6	1.0	1.0	1.8	2.95	4.95	21	213	795	...	...	1000
4 x 10	1.0	1.0	1.8	3.82	5.82	25	358	1350	110	1100	1000
4 x 16	1.0	1.0	1.8	4.83	6.83	27	568	1720	174	1330	1000
4 x 25	1.2	1.0	1.9	6.02	8.42	31	900	2350	275	1730	500
4 x 35	1.2	1.0	2.0	shaped	shaped	32	1259	2640	385	1770	500
4 x 50	1.4	1.2	2.2	shaped	shaped	37	1705	3650	521	2470	500
4 x 70	1.4	1.2	2.3	shaped	shaped	41	2464	4670	754	2960	500
4 x 95	1.6	1.2	2.5	shaped	shaped	47	3417	6450	1044	4080	500
4 x 120	1.6	1.4	2.6	shaped	shaped	51	4323	7700	1320	4700	250
4 x 150	1.8	1.4	2.8	shaped	shaped	56	5305	9100	1621	5400	250
4 x 185	2.0	1.6	3.0	shaped	shaped	61	6654	11100	2023	6500	250
4 x 240	2.2	1.6	3.2	shaped	shaped	68	8743	13850	2672	7800	250
4 x 300	2.4	1.6	3.4	shaped	shaped	75	10969	17600	3352	10000	250
FOUR CORE WITH REDUCED NEUTRAL											
3 x Ph. +N.	Ph.	N.			Ph.	N.	Ph.	N.			
3 x 25+16	1.2	1.0	1.0	1.9	6.02	4.83	8.42	6.83	30	817	2220	249	1650	500
3 x 35 + 16	1.2	1.0	1.0	1.9	shaped	4.83	shaped	6.83	31	1086	2400	333	1650	500
3 x 50 + 25	1.4	1.2	1.0	2.1	shaped	6.02	shaped	8.42	35	1504	3290	460	2250	500
3 x 70 + 35	1.4	1.2	1.2	2.2	shaped	shaped			39	2163	4240	662	2740	500
3 x 95 + 50	1.6	1.4	1.2	2.4	shaped	shaped			44	2989	5450	914	3380	500
3 x 120+70	1.6	1.4	1.4	2.5	shaped	shaped			49	3858	7050	1179	4370	250
3 x 150+70	1.8	1.4	1.4	2.7	shaped	shaped			53	4594	8150	1404	4960	250
3 x 185+95	2.0	1.6	1.4	2.8	shaped	shaped			58	5845	9850	1786	5800	250
3x240+120	2.2	1.6	1.6	3.0	shaped	shaped			64	7638	12300	2334	7000	250
3x300+150	2.4	1.8	1.6	3.2	shaped	shaped			70	9552	14850	2919	8200	250

* - Solid conductor for sizes up to and including 4 mm^2.
- Stranded sectoral conductor for sizes of 35 mm^2 and above in three and four core cables.
- Stranded circular conductor for remaining sizes.
- Greater sections also available

GALVANIZED STEEL WIRE ARMOURED
PVC INSULATED, PVC SHEATHED
0.6 / 1 KV POWER CABLES
Conforming to IEC 60502-1

ELECTRICAL CHARACTERISTICS

Nominal cross section	DC Resistance at 20˚C(1)		Voltage Drop (2) Cos φ = 0.8		Current carrying capacity (3)			
					Underground Cable		Cables in air	
	Copper	Alu	Copper	Alu	Copper	Alu	Copper	Alu
mm²	Ω/Km	Ω/Km	V/A x Km	V/A x Km	Amp	Amp	Amp	Amp
1.5	12.1	...	23.3	...	30	...	22	...
2.5	7.41	...	14.2	...	41	...	30	...
4	4.61	...	9.0	...	53	...	40	...
6	3.08	...	6.1	...	67	...	52	...
10	1.83	3.08	3.7	6.1	91	67	71	55
16	1.15	1.91	2.3	3.8	115	90	96	75
25	0.727	1.20	1.5	2.4	146	114	127	99
35	0.524	0.868	1.1	1.7	176	137	157	125
50	0.387	0.641	0.9	1.4	212	165	190	151
70	0.268	0.443	0.6	1.0	261	204	242	192
95	0.193	0.320	0.5	0.7	313	244	293	232
120	0.153	0.253	0.4	0.6	358	279	339	269
150	0.124	0.206	0.4	0.5	400	312	390	309
185	0.0991	0.164	0.3	0.4	451	352	444	353
240	0.0754	0.125	0.3	0.3	522	407	522	415
300	0.0601	0.100	0.2	0.3	590	460	595	472
400	0.0470	0.0778	0.2	0.2	680	530	695	552

(1) At different operating T(˚C) : R = R20˚C {1+ α (T˚C - 20)}
α : Temperature coefficient at 20˚C = 0.00393 for copper & 0.00403 for aluminium

(2) In three phase system decrease above listed voltage drop by 15%

(3) a) Laying conditions : - Underground : Temperature of the soil 20˚C - Thermal resistivity 100˚C cm/w
- In air : Ambient temperature 30˚C

b) In three phase system decrease above listed current ratings by 10%

GALVANIZED STEEL WIRE ARMOURED
XLPE INSULATED, PVC SHEATHED
0.6 / 1 KV POWER CABLES
Conforming to IEC 60502-1

DIMENSIONAL CHARACTERISTICS

Nominal cross section*	Radial Thickness of			Nominal Diameters			Approximative net weight				Length on drum
							Copper cable		Aluminium cable		
	Insulation	Inner Sheath	Outer Sheath	Conductor	Insulation	Overall	Conductor	Cable	Conductor	Cable	
mm^2	mm	mm	mm	mm	mm	mm	Kg/Km	Kg/Km	Kg/Km	Kg/Km	m
TWO CORE											
2 x 1.5	0.7	1.0	1.8	1.38	2.78	14	27	327	...	...	1000
2 x 2.5	0.7	1.0	1.8	1.78	3.18	15	44	372	...	...	1000
2 x 4	0.7	1.0	1.8	2.25	3.65	16	70	434	...	...	1000
2 x 6	0.7	1.0	1.8	2.95	4.35	18	107	535	...	...	1000
2 x 10	0.7	1.0	1.8	3.82	5.22	19	179	685	55	560	1000
2 x 16	0.7	1.0	1.8	4.83	6.23	21	284	880	87	685	1000
2 x 25	0.9	1.0	1.8	6.02	7.82	26	450	1550	138	1240	500
2 x 35	0.9	1.0	1.8	7.15	8.95	29	624	1880	191	1450	500
THREE CORE											
3 x 1.5	0.7	1.0	1.8	1.38	2.78	15	40	354	...	...	1000
3 x 2.5	0.7	1.0	1.8	1.78	3.18	16	66	419	...	...	1000
3 x 4	0.7	1.0	1.8	2.25	3.65	17	105	490	...	...	1000
3 x 6	0.7	1.0	1.8	2.95	4.35	18	160	610	...	...	1000
3 x 10	0.7	1.0	1.8	3.82	5.22	20	269	795	82	610	1000
3 x 16	0.7	1.0	1.8	4.83	6.23	24	426	1350	130	1050	1000
3 x 25	0.9	1.0	1.8	6.02	7.82	28	675	1820	206	1350	500
3 x 35	0.9	1.0	1.8	shaped	shaped	28	945	1990	289	1330	500
3 x 50	1.0	1.0	2.0	shaped	shaped	31	1279	2490	391	1600	500
3 x 70	1.1	1.0	2.1	shaped	shaped	35	1848	3500	565	2220	500
3 x 95	1.1	1.2	2.2	shaped	shaped	39	2562	4480	783	2700	500
3 x 120	1.2	1.2	2.4	shaped	shaped	43	3242	5400	990	3150	250
3 x 150	1.4	1.4	2.6	shaped	shaped	50	3978	7150	1216	4390	250
3 x 185	1.6	1.4	2.7	shaped	shaped	53	4990	8300	1525	4840	250
3 x 240	1.7	1.6	2.9	shaped	shaped	58	6557	10350	2004	5800	250
3 x 300	1.8	1.6	3.1	shaped	shaped	63	8226	12450	2514	6650	250

* - Solid conductor for sizes up to and including 4 mm^2.
- Stranded sectoral conductor for sizes of 35 mm^2 and above in three and four core cables.
- Stranded circular conductor for remaining sizes.
- Greater sections also available

GALVANIZED STEEL WIRE ARMOURED
XLPE INSULATED, PVC SHEATHED
0.6 / 1 KV POWER CABLES
Conforming to IEC 60502-1

Nominal cross section*	Radial Thickness of			Nominal Diameters			Approximative net weight				Length on drum
							Copper cable		Aluminium cable		
	Insulation	Inner Sheath	Outer Sheath	Conductor	Insulation	Overall	Conductor	Cable	Conductor	Cable	
mm^2	mm	mm	mm	mm	mm	mm	Kg/Km	Kg/Km	Kg/Km	Kg/Km	m
FOUR CORE											
4 x 1.5	0.7	1.0	1.8	1.38	2.78	15	53	388	...	...	1000
4 x 2.5	0.7	1.0	1.8	1.78	3.18	16	88	459	...	...	1000
4 x 4	0.7	1.0	1.8	2.25	3.65	18	140	560	...	...	1000
4 x 6	0.7	1.0	1.8	2.95	4.35	19	213	705	...	...	1000
4 x 10	0.7	1.0	1.8	3.82	5.22	22	358	935	110	685	1000
4 x 16	0.7	1.0	1.8	4.83	6.23	25	568	1570	174	1180	1000
4 x 25	0.9	1.0	1.8	6.02	7.82	30	900	2160	275	1540	500
4 x 35	0.9	1.0	1.9	shaped	shaped	31	1259	2470	385	1600	500
4 x 50	1.0	1.0	2.1	shaped	shaped	35	1705	3340	521	2160	500
4 x 70	1.1	1.2	2.2	shaped	shaped	40	2464	4430	754	2720	500
4 x 95	1.1	1.2	2.4	shaped	shaped	44	3417	5650	1044	3280	500
4 x 120	1.2	1.2	2.5	shaped	shaped	49	4323	7250	1320	4250	250
4 x 150	1.4	1.4	2.7	shaped	shaped	53	5305	8700	1621	5000	250
4 x 185	1.6	1.4	2.9	shaped	shaped	59	6654	10500	2023	5900	250
4 x 240	1.7	1.6	3.1	shaped	shaped	65	8743	13200	2672	7150	250
4 x 300	1.8	1.6	3.3	shaped	shaped	71	10969	15950	3352	8350	250

FOUR CORE WITH REDUCED NEUTRAL														
3 x Ph. +N.	Ph.	N.			Ph.	N.	Ph.	N.						
3 x 25+16	0.9	0.7	1.0	1.8	6.02	4.83	7.82	6.23	29	817	2050	249	1480	500
3 x 35 + 16	0.9	0.7	1.0	1.9	shaped	4.83	shaped	6.23	30	1086	2240	333	1490	500
3 x 50 + 25	1.0	0.9	1.0	2.0	shaped	6.02	shaped	7.82	33	1504	3050	460	2010	500
3 x 70 + 35	1.1	0.9	1.2	2.2	shaped	shaped			38	2163	4080	662	2580	500
3 x 95 + 50	1.1	1.0	1.2	2.3	shaped	shaped			42	2989	5100	914	3030	500
3 x 120+70	1.2	1.1	1.2	2.4	shaped	shaped			46	3858	6250	1179	3570	250
3 x 150+70	1.4	1.1	1.4	2.6	shaped	shaped			51	4594	7750	1404	4560	250
3 x 185+95	1.6	1.1	1.4	2.8	shaped	shaped			56	5845	9400	1786	5350	250
3x240+120	1.7	1.2	1.6	3.0	shaped	shaped			62	7638	11750	2334	6450	250
3x300+150	1.8	1.4	1.6	3.1	shaped	shaped			67	9552	14150	2919	7500	250

* - Solid conductor for sizes up to and including 4 mm^2.
- Stranded sectoral conductor for sizes of 35 mm^2 and above in three and four core cables.
- Stranded circular conductor for remaining sizes.
- Greater sections also available

GALVANIZED STEEL WIRE ARMOURED
XLPE INSULATED, PVC SHEATHED
0.6 / 1 KV POWER CABLES
Conforming to IEC 60502-1

ELECTRICAL CHARACTERISTICS

Nominal cross section	DC Resistance at 20˚C (1)		Voltage Drop (2) Cos φ = 0.8		Current carrying capacity (3)			
					Underground Cable		Cables in air	
	Copper	Alu	Copper	Alu	Copper	Alu	Copper	Alu
mm²	Ω/Km	Ω/Km	V/A x Km	V/A x Km	Amp	Amp	Amp	Amp
1.5	12.1	...	24.8	...	34	...	27	...
2.5	7.41	...	14.8	...	46	...	37	...
4	4.61	...	9.2	...	59	...	50	...
6	3.08	...	6.2	...	74	...	64	...
10	1.83	3.08	3.7	6.1	101	79	88	69
16	1.15	1.91	2.4	3.9	128	100	119	93
25	0.727	1.20	1.6	2.5	162	126	157	122
35	0.524	0.868	1.2	1.9	195	152	194	151
50	0.387	0.641	0.87	1.4	235	183	235	183
70	0.268	0.443	0.64	1.0	290	226	299	234
95	0.193	0.320	0.48	0.75	347	271	362	282
120	0.153	0.253	0.40	0.60	397	310	419	327
150	0.124	0.206	0.35	0.50	444	346	481	375
185	0.0991	0.164	0.29	0.42	500	390	549	428
240	0.0754	0.125	0.24	0.33	578	452	645	503
300	0.0601	0.100	0.23	0.30	655	512	735	575
400	0.0470	0.0778	0.22	0.28	754	588	859	670

(1) At different operating T(˚C) : R = R20˚C {1+ α (T˚C - 20)}
α : Temperature coefficient at 20˚C = 0.00393 for copper & 0.00403 for aluminium

(2) In three phase system decrease above listed voltage drop by 15%

(3) a) Laying conditions : - Underground : Temperature of the soil 20˚C - Thermal resistivity 100˚C cm/w
- In air : Ambient temperature 30˚C

b) In three phase system decrease above listed current ratings by 10%

GALVANIZED STEEL STRIP ARMOURED
PVC INSULATED, PVC SHEATHED
0.6 / 1 KV POWER CABLES
Conforming to IEC 60502-1

DIMENSIONAL CHARACTERISTICS

Nominal cross section*	Radial Thickness of			Nominal Diameters			Approximative net weight				Length on drum
							Copper cable		Aluminium cable		
	Insulation	Inner Sheath	Outer Sheath	Conductor	Insulation	Overall	Conductor	Cable	Conductor	Cable	
mm^2	mm	mm	mm	mm	mm	mm	Kg/Km	Kg/Km	Kg/Km	Kg/Km	m
TWO CORE											
2 x 16	1.0	1.0	1.8	4.83	6.83	23	284	1080	87	885	1000
2 x 25	1.2	1.0	1.8	6.02	8.42	26	450	1440	138	1130	500
2 x 35	1.2	1.0	1.8	7.15	9.55	28	624	1760	191	1330	500
THREE CORE											
3 x 16	1.0	1.0	1.8	4.83	6.83	24	426	1260	130	965	1000
3 x 25	1.2	1.0	1.8	6.02	8.42	27	675	1730	206	1260	500
3 x 35	1.2	1.0	1.8	shaped	shaped	28	945	1890	289	1230	500
3 x 50	1.4	1.0	2.0	shaped	shaped	31	1279	2420	391	1530	500
3 x 70	1.4	1.2	2.1	shaped	shaped	35	1848	3190	565	1910	500
3 x 95	1.6	1.2	2.2	shaped	shaped	39	2562	4160	783	2380	500
3 x 120	1.6	1.2	2.3	shaped	shaped	42	3242	5000	990	2750	250
3 x 150	1.8	1.4	2.5	shaped	shaped	49	3978	6150	1216	3390	250
3 x 185	2.0	1.4	2.6	shaped	shaped	51	4990	7350	1525	3890	250
3 x 240	2.2	1.4	2.8	shaped	shaped	57	6557	9300	2004	4750	250
3 x 300	2.4	1.6	3.0	shaped	shaped	63	8226	11600	2514	5900	250
FOUR CORE											
4 x 16	1.0	1.0	1.8	4.83	6.83	26	568	1500	174	1100	1000
4 x 25	1.2	1.0	1.8	6.02	8.42	30	900	2080	275	1460	500
4 x 35	1.2	1.0	1.9	shaped	shaped	31	1259	2370	385	1500	500
4 x 50	1.4	1.2	2.1	shaped	shaped	35	1705	3080	521	1900	500
4 x 70	1.4	1.2	2.2	shaped	shaped	39	2464	4040	754	2330	500
4 x 95	1.6	1.2	2.4	shaped	shaped	44	3417	5350	1044	2980	500
4 x 120	1.6	1.4	2.5	shaped	shaped	48	4323	6500	1320	3500	250
4 x 150	1.8	1.4	2.7	shaped	shaped	52	5305	7800	1621	4120	250
4 x 185	2.0	1.6	2.8	shaped	shaped	58	6654	9700	2023	5100	250
4 x 240	2.2	1.6	3.1	shaped	shaped	65	8743	12300	2672	6250	250
4 x 300	2.4	1.6	3.3	shaped	shaped	71	10969	15100	3352	7500	250

GALVANIZED STEEL STRIP ARMOURED
PVC INSULATED, PVC SHEATHED
0.6 / 1 KV POWER CABLES
Conforming to IEC 60502-1

Nominal cross section*	Radial Thickness of				Nominal Diameters					Approximative net weight				Length on drum
										Copper cable		Aluminium cable		
	Insulation		Inner Sheath	Outer Sheath	Conductor		Insulation		Overall	Conductor	Cable	Conductor	Cable	
mm^2	mm		mm	mm	mm		mm		mm	Kg/Km	Kg/Km	Kg/Km	Kg/Km	m
FOUR CORE WITH REDUCED NEUTRAL														
3 x Ph. +N.	Ph.	N.			Ph.	N.	Ph.	N.						
3 x 25+16	1.2	1.0	1.0	1.8	6.02	4.83	8.42	6.83	29	817	1960	249	1390	500
3 x 35 + 16	1.2	1.0	1.0	1.9	shaped	4.83	shaped	6.83	30	1086	2140	333	1390	500
3 x 50 + 25	1.4	1.2	1.0	2.0	shaped	6.02	shaped	8.42	33	1504	2760	460	1720	500
3 x 70 + 35	1.4	1.2	1.2	2.1	shaped		shaped		37	2163	3630	662	2130	500
3 x 95 + 50	1.6	1.4	1.2	2.3	shaped		shaped		42	2989	4770	914	2700	500
3 x 120+70	1.6	1.4	1.4	2.4	shaped		shaped		46	3858	5900	1179	3220	250
3 x 150+70	1.8	1.4	1.4	2.5	shaped		shaped		49	4594	6850	1404	3660	250
3 x 185+95	2.0	1.6	1.4	2.7	shaped		shaped		54	5845	8500	1786	4440	250
3x240+120	2.2	1.6	1.6	2.9	shaped		shaped		61	7638	10900	2334	5600	250
3x300+150	2.4	1.8	1.6	3.1	shaped		shaped		67	9552	13300	2919	6650	250

* - Solid conductor for sizes up to and including 4 mm^2.
- Stranded sectoral conductor for sizes of 35 mm^2 and above in three and four core cables.
- Stranded circular conductor for remaining sizes.
- Greater sections also available.

GALVANIZED STEEL STRIP ARMOURED
PVC INSULATED, PVC SHEATHED
0.6 / 1 KV POWER CABLES
Conforming to IEC 60502-1

ELECTRICAL CHARACTERISTICS

Nominal cross section	DC Resistance at 20˚C (1)		Voltage Drop (2) Cos φ = 0.8		Current carrying capacity (3)			
					Underground Cable		Cables in air	
	Copper	Alu	Copper	Alu	Copper	Alu	Copper	Alu
mm²	Ω/Km	Ω/Km	V/A x Km	V/A x Km	Amp	Amp	Amp	Amp
1.5	12.1	...	23.3	...	30	...	22	...
2.5	7.41	...	14.2	...	41	...	30	...
4	4.61	...	9.0	...	53	...	40	...
6	3.08	...	6.1	...	67	...	52	...
10	1.83	3.08	3.7	6.1	91	67	71	55
16	1.15	1.91	2.3	3.8	115	90	96	75
25	0.727	1.20	1.5	2.4	146	114	127	99
35	0.524	0.868	1.1	1.7	176	137	157	125
50	0.387	0.641	0.9	1.4	212	165	190	151
70	0.268	0.443	0.6	1.0	261	204	242	192
95	0.193	0.320	0.5	0.7	313	244	293	232
120	0.153	0.253	0.4	0.6	358	279	339	269
150	0.124	0.206	0.4	0.5	400	312	390	309
185	0.0991	0.164	0.3	0.4	451	352	444	353
240	0.0754	0.125	0.3	0.3	522	407	522	415
300	0.0601	0.100	0.2	0.3	590	460	595	472
400	0.0470	0.0778	0.2	0.2	680	530	695	552

(1) At different operating T(˚C) : R = R20˚C {1+ α (T˚C - 20)}
α : Temperature coefficient at 20˚C = 0.00393 for copper & 0.00403 for aluminium

(2) In three phase system decrease above listed voltage drop by 15%

(3) a) Laying conditions : - Underground : Temperature of the soil 20˚C - Thermal resistivity 100˚C cm/w
- In air : Ambient temperature 30˚C

b) In three phase system decrease above listed current ratings by 10%

GALVANIZED STEEL STRIP ARMOURED
XLPE INSULATED, PVC SHEATHED
0.6 / 1 KV POWER CABLES
Conforming to IEC 60502-1

DIMENSIONAL CHARACTERISTICS

Nominal cross section*	Radial Thickness of			Nominal Diameters			Approximative net weight				Length on drum
							Copper cable		Aluminium cable		
	Insulation	Inner Sheath	Outer Sheath	Conductor	Insulation	Overall	Conductor	Cable	Conductor	Cable	
mm^2	mm	mm	mm	mm	mm	mm	Kg/Km	Kg/Km	Kg/Km	Kg/Km	m
TWO CORE											
2 x 16	0.7	1.0	1.8	4.83	6.23	22	284	985	87	790	1000
2 x 25	0.9	1.0	1.8	6.02	7.82	25	450	1340	138	1030	500
2 x 35	0.9	1.0	1.8	7.15	8.95	27	624	1650	191	1220	500
THREE CORE											
3 x 16	0.7	1.0	1.8	4.83	6.23	23	426	1160	130	865	1000
3 x 25	0.9	1.0	1.8	6.02	7.82	26	675	1600	206	1130	500
3 x 35	0.9	1.0	1.8	shaped	shaped	26	945	1770	289	1150	500
3 x 50	1.0	1.0	1.9	shaped	shaped	29	1278	2230	391	1340	500
3 x 70	1.1	1.0	2.0	shaped	shaped	33	1848	2970	565	1690	500
3 x 95	1.1	1.2	2.2	shaped	shaped	37	2562	3900	783	2120	500
3 x 120	1.2	1.2	2.3	shaped	shaped	40	3242	4760	990	2510	250
3 x 150	1.4	1.4	2.4	shaped	shaped	47	3978	5850	1216	3090	250
3 x 185	1.6	1.4	2.6	shaped	shaped	49	4990	7050	1525	3590	250
3 x 240	1.7	1.6	2.8	shaped	shaped	55	6557	8950	2004	4400	250
3 x 300	1.8	1.6	2.9	shaped	shaped	59	8325	11000	2514	5200	250
FOUR CORE											
4 x 16	0.7	1.0	1.8	4.83	6.23	24	568	1380	174	985	1000
4 x 25	0.9	1.0	1.8	6.02	7.82	28	900	1930	275	1310	500
4 x 35	0.9	1.0	1.9	shaped	shaped	29	1259	2220	385	1350	500
4 x 50	1.0	1.0	2.0	shaped	shaped	32	1705	2820	521	1640	500
4 x 70	1.1	1.2	2.1	shaped	shaped	37	2464	3830	754	2120	500
4 x 95	1.1	1.2	2.3	shaped	shaped	41	3417	5000	1044	2630	500
4 x 120	1.2	1.2	2.4	shaped	shaped	45	4323	6100	1320	3100	250
4 x 150	1.4	1.4	2.6	shaped	shaped	50	5305	7400	1621	3720	250
4 x 185	1.6	1.4	2.8	shaped	shaped	55	6654	9150	2033	4530	250
4 x 240	1.7	1.6	3.0	shaped	shaped	62	8743	11800	2672	5750	250
4 x 300	1.8	1.6	3.2	shaped	shaped	68	10969	14400	3352	6800	250

GALVANIZED STEEL STRIP ARMOURED
XLPE INSULATED, PVC SHEATHED
0.6 / 1 KV POWER CABLES
Conforming to IEC 60502-1

Nominal cross section*	Radial Thickness of			Nominal Diameters			Approximative net weight				Length on drum
							Copper cable		Aluminium cable		
	Insulation	Inner Sheath	Outer Sheath	Conductor	Insulation	Overall	Conductor	Cable	Conductor	Cable	
mm^2	mm	mm	mm	mm	mm	mm	Kg/Km	Kg/Km	Kg/Km	Kg/Km	m
FOUR CORE WITH REDUCED NEUTRAL											
3 x Ph. +N.	Ph.	N.			Ph.	N.	Ph.	N.			
3 x 25+16	0.9	0.7	1.0	1.8	6.02	4.83	7.82	6.23	27	817	1810	249	1240	500
3 x 35 + 16	0.9	0.7	1.0	1.8	shaped	4.83	shaped	6.23	28	1086	1990	333	1240	500
3 x 50 + 25	1.0	0.9	1.0	1.9	shaped	6.02	shaped	7.82	31	1504	2560	460	1520	500
3 x 70 + 35	1.1	0.9	1.2	2.1	shaped		shaped		35	2163	3450	662	1950	500
3 x 95 + 50	1.1	1.0	1.2	2.2	shaped		shaped		39	2989	4470	914	2400	500
3 x 120+70	1.2	1.1	1.2	2.3	shaped		shaped		43	3858	5550	1179	2870	250
3 x 150+70	1.4	1.1	1.4	2.5	shaped		shaped		47	4594	6550	1404	3360	250
3 x 185+95	1.6	1.1	1.4	2.6	shaped		shaped		52	5845	8100	1786	4040	250
3x240+120	1.7	1.2	1.6	2.8	shaped		shaped		58	7638	10400	2334	5100	250
3x300+150	1.8	1.4	1.6	3.0	shaped		shaped		64	9552	12700	2919	6050	250

* - Solid conductor for sizes up to and including 4 mm^2.
- Stranded sectoral conductor for sizes of 35 mm^2 and above in three and four core cables.
- Stranded circular conductor for remaining sizes.
- Greater sections also available.

GALVANIZED STEEL STRIP ARMOURED
XLPE INSULATED, PVC SHEATHED
0.6 / 1 KV POWER CABLES
Conforming to IEC 60502-1

ELECTRICAL CHARACTERISTICS

Nominal cross section	DC Resistance at 20˚C (1)		Voltage Drop (2) Cos φ = 0.8		Current carrying capacity (3)			
					Underground Cable		Cables in air	
	Copper	Alu	Copper	Alu	Copper	Alu	Copper	Alu
mm²	Ω/Km	Ω/Km	V/A x Km	V/A x Km	Amp	Amp	Amp	Amp
1.5	12.1	...	24.8	...	34	...	27	...
2.5	7.41	...	14.8	...	46	...	37	...
4	4.61	...	9.2	...	59	...	50	...
6	3.08	...	6.2	...	74	...	64	...
10	1.83	3.08	3.7	6.1	101	79	88	69
16	1.15	1.91	2.4	3.9	128	100	119	93
25	0.727	1.20	1.6	2.5	162	126	157	122
35	0.524	0.868	1.2	1.9	195	152	194	151
50	0.387	0.641	0.87	1.4	235	183	235	183
70	0.268	0.443	0.64	1.0	290	226	299	234
95	0.193	0.320	0.48	0.75	347	271	362	282
120	0.153	0.253	0.40	0.60	397	310	419	327
150	0.124	0.206	0.35	0.50	444	346	481	375
185	0.0991	0.164	0.29	0.42	500	390	549	428
240	0.0754	0.125	0.24	0.33	578	452	645	503
300	0.0601	0.100	0.23	0.30	655	512	735	575
400	0.0470	0.0778	0.22	0.28	754	588	859	670

(1) At different operating T(˚C) : R = R20˚C {1+ α (T˚C - 20)}
α : Temperature coefficient at 20˚C = 0.00393 for copper & 0.00403 for aluminium

(2) In three phase system decrease above listed voltage drop by 15%

(3) a) Laying conditions : - Underground : Temperature of the soil 20˚C - Thermal resistivity 100˚C cm/w
- In air : Ambient temperature 30˚C

b) In three phase system decrease above listed current ratings by 10%

UNARMOURED, XLPE INSULATED, PVC SHEATHED
0.6 / 1 KV CONTROLE CABLES
Conforming to IEC 60502-1

DIMENSIONAL CHARACTERISTICS

Number* of Conductors	Radial Thickness of		Nominal Diameters			Approximative net weight		Length on drum
	Insulation	Outer Sheath	Conductor	Insulation	Overall	Copper	Cable	
	mm	mm	mm	mm	mm	Kg/Km	Kg/Km	m
CONDUCTOR 1.5 mm²								
5	0.7	1.8	1.38	2.78	12	66	189	1000
7	0.7	1.8	1.38	2.78	13	92	216	1000
8	0.7	1.8	1.38	2.78	14	105	246	1000
10	0.7	1.8	1.38	2.78	16	131	293	1000
12	0.7	1.8	1.38	2.78	16	157	355	1000
14	0.7	1.8	1.38	2.78	17	184	375	1000
19	0.7	1.8	1.38	2.78	19	249	515	1000
24	0.7	1.8	1.38	2.78	21	314	635	1000
30	0.7	1.8	1.38	2.78	23	393	710	1000
37	0.7	1.8	1.38	2.78	24	484	845	1000
40	0.7	1.8	1.38	2.78	25	524	910	500
48	0.7	1.8	1.38	2.78	27	628	1070	500
CONDUCTOR 2.5 mm²								
5	0.7	1.8	1.78	3.18	13	109	251	1000
7	0.7	1.8	1.78	3.18	14	153	293	1000
8	0.7	1.8	1.78	3.18	15	175	336	1000
10	0.7	1.8	1.78	3.18	17	218	403	1000
12	0.7	1.8	1.78	3.18	18	262	462	1000
14	0.7	1.8	1.78	3.18	19	305	525	1000
19	0.7	1.8	1.78	3.18	21	414	675	1000
24	0.7	1.8	1.78	3.18	24	523	840	1000
30	0.7	1.8	1.78	3.18	25	653	1020	1000
37	0.7	1.8	1.78	3.18	27	806	1230	1000
40	0.7	1.8	1.78	3.18	28	871	1320	500
48	0.7	1.9	1.78	3.18	30	1045	1570	500

* Greater number of conductors also available.

ARMOURED, XLPE INSULATED, PVC SHEATHED
0.6 / 1 KV CONTROLE CABLES
Conforming to IEC 60502-1

DIMENSIONAL CHARACTERISTICS

Number* of Conductors	Radial Thickness of			Nominal Diameters			Approximative net weight		Length on drum
	Insulation	Inner Sheath	Outer Sheath	Conductor	Insulation	Overall	Copper	Cable	
	mm	mm	mm	mm	mm	mm	Kg/Km	Kg/Km	m
CONDUCTOR 1.5 mm²									
5	0.7	1.0	1.8	1.38	2.78	16	66	433	1000
7	0.7	1.0	1.8	1.38	2.78	17	92	493	1000
8	0.7	1.0	1.8	1.38	2.78	18	105	530	1000
10	0.7	1.0	1.8	1.38	2.78	20	131	615	1000
12	0.7	1.0	1.8	1.38	2.78	20	157	685	1000
14	0.7	1.0	1.8	1.38	2.78	23	184	1000	1000
19	0.7	1.0	1.8	1.38	2.78	24	249	1160	1000
24	0.7	1.0	1.8	1.38	2.78	27	314	1370	1000
30	0.7	1.0	1.8	1.38	2.78	28	393	1530	500
37	0.7	1.0	1.8	1.38	2.78	30	484	1740	500
40	0.7	1.0	1.9	1.38	2.78	31	524	1840	500
48	0.7	1.0	2.0	1.38	2.78	34	628	2320	500
CONDUCTOR 2.5 mm²									
5	0.7	1.0	1.8	1.78	3.18	17	109	505	1000
7	0.7	1.0	1.8	1.78	3.18	18	153	580	1000
8	0.7	1.0	1.8	1.78	3.18	19	175	645	1000
10	0.7	1.0	1.8	1.78	3.18	23	218	1040	1000
12	0.7	1.0	1.8	1.78	3.18	24	262	1120	1000
14	0.7	1.0	1.8	1.78	3.18	25	305	1210	1000
19	0.7	1.0	1.8	1.78	3.18	26	414	1430	1000
24	0.7	1.0	1.8	1.78	3.18	30	523	1720	500
30	0.7	1.0	1.8	1.78	3.18	31	653	1950	500
37	0.7	1.0	1.8	1.78	3.18	34	806	2460	500
40	0.7	1.0	2.0	1.78	3.18	35	871	2570	500
48	0.7	1.2	2.2	1.78	3.18	38	1045	3040	500

* Greater number of conductors also available.

5.6 AERIAL BUNDLED CONDUCTORS (TORSADES)

5.6.1 - 3 PHASES + NEUTRAL / MESSENGER + STREET LIGHTING CONDUCTOR

Phase and street lighting conductors :

Round stranded and compacted aluminium conforming to the applicable requirements of IEC 60228.

Neutral / Messenger Conductor :

Round stranded and compacted aluminium alloy conforming to the applicable requirements of IEC 60208.

Insulation :

Extruded black XLPE.

Design :

The cable consist of three phase conductors and one or two optional street lighting conductors stranded arround the messenger.

Core identification :

Either by longitunal ridges or by numbering.

Marking :

Embossed on the phase insulation.

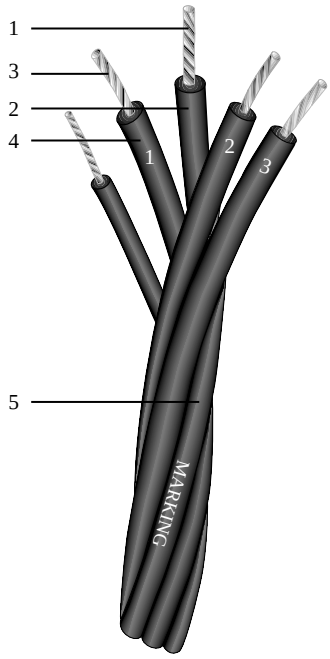

1	Stranded Aluminium alloy conductor (Neutral / Messenger)
2	XLPE Insulation
3	Stranded Aluminium conductor (Phase or street lighting conductor)
4	XLPE Insulation
5	Marking

CHARACTERISTICS OF THE NEUTRAL / MESSENGER CONDUCTOR

Nominal cross sectional area (mm^2)		54.6 (7/3.15)	70 (7/3.45)
Diameter of the Conductor (mm)		9.2	10
Diameter over the insulation (mm)	min.	12.3	13.1
	max.	13.0	13.6
Breaking load (daN)	min.	1660	2000
Elasticity Modulus (MPA)		62000	62000
Linear dilatation factor		23×10^{-6}	23×10^{-6}

AERIAL BUNDLED CONDUCTORS (TORSADES0
3 PHASES + NEUTRAL / MESSENGER + STREET LIGHTING CONDUCTOR
Conforming to NFC 33 - 209

TECHNICAL CHARACTERISTICS

Nominal cross section	Nominal Diameters					weight	DC Resistance at 20˚C		Current carrying capacity	
	Conductors		Insulation		Overall					
	phase	street lighting	phase	street lighting			phase	street lighting	phase	street lighting
mm^2	mm	mm	mm	mm	mm	Kg/Km	Ω/Km	Ω/Km	Amp	Amp
3 x 25+54.6	5.8	-	8.6	-	24	531	1.200	-	97	-
3 x 25+54.6+16	5.8	4.6	8.6	7.1	25	600	1.200	1.910	97	74
3 x 25+54.6+2x16	5.8	4.6	8.6	7.1	26.5	670	1.200	1.910	97	74
3 x 35+54.6	6.8	-	10.2	-	24.6	644	0.868	-	118	-
3 x 35+54.6+16	6.8	4.6	10.2	7.1	25.5	713	0.868	1.910	118	74
3 x 35+54.6+2x16	6.8	4.6	10.2	7.1	27.5	781	0.868	1.910	118	74
3 x 50+54.6	7.9	-	11.2	-	27	773	0.641	-	141	-
3 x 50+54.6+16	7.9	4.6	11.2	7.1	28.5	841	0.641	1.910	141	74
3 x 50+54.6+2x16	7.9	4.6	11.2	7.1	30	990	0.641	1.910	141	74
3 x 70+54.6	9.7	-	13.3	-	30	994	0.443	-	180	-
3 x 70+54.6+16	9.7	4.6	13.3	7.1	32.2	1063	0.443	1.910	180	74
3 x 70+54.6+2x16	9.7	4.6	13.3	7.1	33	11431	0.443	1.910	180	74
3 x 70 + 70	9.7	-	13.3	-	32	1034	0.443	-	213	-
3 x 70 + 70+16	9.7	4.6	13.3	7.1	33	1103	0.443	1.910	213	74
3 x 70 + 70+2x16	9.7	4.6	13.3	7.1	34	1172	0.443	1.910	213	74
3 x 150 + 70	13.9	-	17.3	-	40	1684	0.206	-	335	-
3 x 150+70+16	13.9	4.6	17.3	7.1	41	1753	0.206	1.910	335	74
3 x 150+70+2x16	13.9	4.6	17.3	7.1	42	1822	0.206	1.910	335	74

5.6.2 - 2 and 4 ALUMINIUM CONDUCTORS + PILOT COPPER CONDUCTOR CONFORMING TO **NFC 33 - 209**

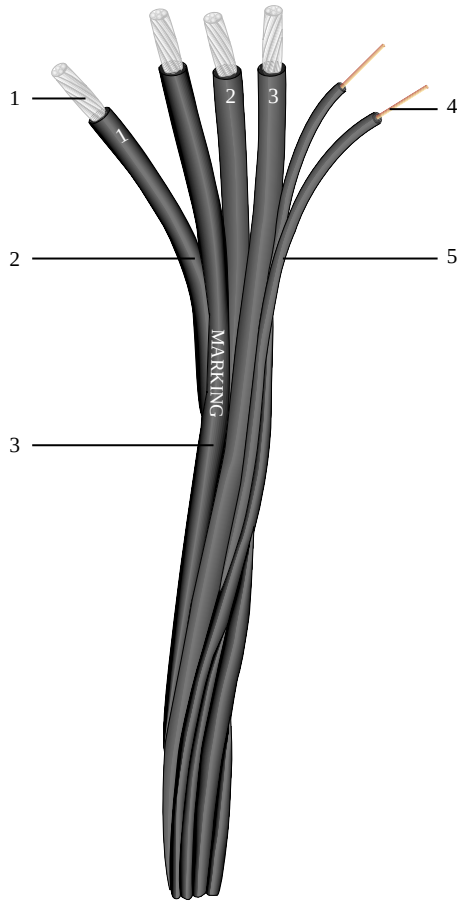

Phase Conductor

1	Stranded Aluminium conductor
2	XLPE Insulation
3	Marking

Pilot Conductor

4	Solid Copper Conductor
5	XLPE Insulation

TECHNICAL CHARACTERISTICS

Nominal Cross Section	Nominal Diameters				Weight	DC Resistance at 20°C	Current Carrying Capacity	Voltage Drop	Breaking load of each Conductor	
	Conductor min.	Insulation		Overall						
		min.	max.						min.	max.
mm²	mm	mm	mm	mm	Kg/Km	Ω/Km	Amp	V/A Km	daN	daN
2x16	4.7	7.0	7.9	14.8	140	1.91	83	3.98	190	290
2x25	6.0	8.7	9.6	18.2	213	1.20	108	2.54	300	450
4x16	4.7	7.0	7.9	17.8	280	1.91	74	3.28	190	290
4x25	6.0	8.7	9.6	21.8	426	1.20	97	2.18	300	450
2x16+2x1.5	4.6	7.0	7.8	16.0	191	1.91	83	3.98	190	290
4x16+2x1.5	4.5	7.0	7.8	17.4	328	1.91	74	3.28	190	290
2x25+2x1.5	5.8	8.6	9.4	19.5	270	1.20	108	3.54	300	450
4x25+2x1.5	5.8	8.6	9.4	21.6	486	1.20	97	2.18	300	450

6 TECHNICAL INFORMATION

6.1 Formulae

Ohms law	$U = RI$
Joules law	$W = RI^2t$
Resistance of a line (feed and return)	$R = \frac{2L}{x\,S}$
DC Power	$P_{(w)} = U\,I$
Single phase Power	$P(w) = U\,I\cos\varphi$
Three phase Power	$P_{(w)} = \sqrt{3}\,U\,I\cos\varphi$
DC Current	$I = \frac{P_{(w)}}{U}$
AC Single core current	$I = \frac{P_{(VA)}}{U} = \frac{P_{(W)}}{U\cos\varphi}$
AC Three phase current	$I = \frac{P_{(VA)}}{U\sqrt{3}} = \frac{P_{(W)}}{U\sqrt{3}\cos\varphi}$
Efficiency	$e = \frac{P\ output}{P\ input}$

U	=	Rated Voltage in V (volts) (between phase in three phase system).
I	=	Current in A (Amperes).
R	=	Resistance in (ohms).
W	=	Energy in Ws (Watt second).
t	=	Time in s (second)
L	=	Length of cable in m (meter).
x	=	Conductivity (56 for copper and 34 for Aluminium).
S	=	Cross sectional area in mm^2.
P	=	Power in W (Watt) or VA (Volt Ampere).
Cosφ	=	Power factor.
e	=	Efficiency.
Δu	=	Voltage drop sending to receiving end of line in V(Volts).

Voltage drop

Nature of the current	Voltage drop Δu (v)	Size mm^2
Single phase AC/DC systems	If current known	
	$\Delta u = \frac{2\,L\,I}{x\,S}$	$S = \frac{2\,L\,I}{x\,\Delta u}$
	If power known	
	$\Delta u = \frac{2\,L\,P(w)}{x\,S\,U}$	$S = \frac{2L\,P(w)}{x\,\Delta u\,U}$
Three phase system	If current known	
	$\Delta u = \frac{1.73\,L\,I\cos\varphi}{x\,S}$	$S = \frac{1.73\,L\,I\cos\varphi}{x\,\Delta u}$
	If power known	
	$\Delta u = \frac{L\,P(w)}{x\,S\,U}$	$S = \frac{L\,P(w)}{x\,\Delta u\,U}$

6.2 Conversion factors and units

Length :

The SI unit for length is the m

1m = 10^2 cm = 10^3 mm = 10^{-3} Km

1m = 39.37 in = 3.28 ft = 1.0936 Yd = 0.6214 x 10^{-3} miles

1 in = 0.0254 m = 0.0833 ft = 0.0277 Yd = 0.0158 x 10^{-3} miles

1 ft = 0.3048 m = 12 in = 0.333 Yd = 0.189 x 10^{-3} miles

1 Yd = 0.9144 m = 36 in = 3 ft = 0.568 x 10^{-3} miles

1 mile = 1609 m = 63360 in = 5280 ft = 1760 Yd

m = meters, in = inches, ft = feet, Yd = Yards

Weight :

The SI unit for weight is the Kg

1 Kg = 10^3 g = 10^{-3} T (metric ton)

1 Kg = 2.20462 lb = 35.27 oz

1 oz = 28.349 x 10^{-3} Kg = 0.0625 lb

Kg = Kilogrammes, lb = pounds, oz = ounces

Volume :

The SI unit for volume is the m^3

1m^3 = 10 dm^3 = 10^6 cm^3 = 10^9 mm^3

1m^3 = 1000 L = 35.315 ft^3 = 219.97 I.gal = 264.17 U.S. gal

1L = 0.001 m^3 = 0.0353 ft^3 = 0.21997 I.gal = 0.26417 U.S. gal

1 ft^3 = 28.317x10^{-3} m^3 = 28.317 L = 6.2288 I.gal = 7.479 U.S. gal

1 I.gal = 4.546 x 10^{-3} m^3 = 4.546 L = 0.1605 ft^3 = 1.2009 U.S. gal

1 U.S. gal = 3.7854 x 10^{-3} m^3 = 3.785 L = 0.1366 ft^3 = 0.8327 I. gal

l = liters, ft = feet, I.gal = Imperial gallon, U.S.gal = United States gallon

Force :

The SI unit for force is the N

1N = 0.10197 Kgf = 0.2248 Lbf

1Kgf = 9.80665 N = 2.2046 Lbf

1Lbf = 4.4482 N = 0.4536 Kgf

N = Newton, Kgf = Kilogram force, Lbf = pound force

Power :

The SI unit for power is the W

1W = 0.102 Kgm / s = 1.359 x 10^{-3} HP = 3.412 BTU / h

1 Kgm / s = 9.81 W = 0.0133 HP = 33.47 BTU / h

1HP = 735.5 W = 75 Kgm / s = 2510 Btu /h

1 BTu /h = 0.2931 W = 0.0298 Kgm / s = 0.393 x 10^{-3} HP

w = watt, Kgm / s = Kilogramme meter per second,
HP = metric Horse power, BTU /h = British thermal unit per hour

Pressure : The SI unit for pressure is the Pa = 1 N/m^2
1 $N/m^2 = 10^{-5}$ $Kgf/cm^2 = 10^{-5}$ bar
1 $Kgf/cm^2 = 10^5$ N/m^2 = 1 bar

Pa = Pascal, N/m^2 = Newton per square meter
Kgf/cm^2 = Kilogramme force per square centimeter

Work : The SI unit for work is the J
1J = 1Ws (Wattsecond) = 1Nm (Newton meter)
1J = 0.2778×10^{-6} Kwh = 0.239×10^{-3} Kcal
1Kwh = 3.6×10^6 J = 859.8 Kcal
1Kcal = 4186.8 J = 1.163×10^{-3} Kwh

J = Joules, Kwh = Kilowatt hour, Kcal = Kilocalories

Temperature : The SI unit for Temperature is the Kelvin (K)
Temperature in ^{o} C = Temperature in ^{o} K - 273 = 5/9 (Temperature in ^{o} F - 32)
Temperature in ^{o} K = Temperature in ^{o} C + 273

^{o} C = degree celcius, ^{o} K = degree Kelvin, ^{o} F = degree Fahrenheit